INFRASTRUCTURE PIPES CATALOG

EYDO PIPE
INFASTRUCTURE ENGINEERING

www.eydopipe.com.tr

+GF+ hakan PLASTiK

+GF+ hakan PLASTiK
IRAQ DISTRIBUTOR

MELBERK

MELBERK INC. CORP.

Our company, which provides fast and reliable supply services to our valued customers withoutsacrificing quality in your infrastructure projects with its engineering and field experience approaching quarter century, has signed and continues to do many projects in the Iraqi market with you.

Our company, which is one of the pioneers of the sector, continues to be with you in sales and after sales processes with its experienced staff, following the sectoral innovations closely and offering many new product ranges to your service in line with your needs.

We are expanding our product range and service network with the distributorships of brands that have proven their quality and reliability on an international scale.

We are pleased to serve you with our strong supply network for all types of pipes, fittings, consumables and auxiliary equipment you need in the infrastructure area.

OUR ACTIVITY AREAS

- INFRASTRUCTURE PIPES
- INFRASTRUCTURE PIPES FITTINGS
- DUCTILE IRON CASTING EQUIPMENTS

INFRASTRUCTURE PIPES

- CORRUGETED PIPES
- POLYETHYLENE PIPES
- RC POLYETHLENE PIPES
- PVC-U DEEP WELL PIPE
- PVC-U PRESSURIZED PORTABLE WATER PIPES
- PVC-U DRAINAGE PIPES
- CTP PIPES
- DUCTILE PIPES

INFRASTRUCTURE PIPES FITTINGS

- CORRUGETED PIPES FITTINGS
- POLYETHYLENE PIPES FITTINGS
- RC POLYETHLENE PIPES FITTINGS
- PVC-U DEEP WELL PIPES FITTINGS
- PVC-U PRESSURIZED PORTABLE WATER PIPES FITTINGS
- PVC-U DRAINAGE PIPES FITTINGS
- CTP PIPES FITTINGS
- DUCTILE PIPES FITTINGS

DUCTILE IRON CASTING EQUIPMENTS

- FRAMED AND HINGED GRATINGS
- CHANNEL GRATINGS
- SEWERAGE MANHOLE COVERS
- GUTTERED GRATINGS

+GF+

hakan PLASTiK

CONTENTS

CORRUGETED PIPES	9
PVC-U DRAINAGE PIPES	13
POLYETHYLENE / RC POLYETHYLENE PIPES	15
PVC-U PRESSURIZED PORTABLE WATER PIPES	17
PVC-U DEEP WELL PIPE	19

+GF+

hakan PLASTiK

INFRASTRUCTURE ENGINEERING

INFRASTRUCTURE PIPES

CORRUGETED PIPES

POLYETHYLENE PIPES

RC POLYETHLENE PIPES

PVC-U DEEP WELL PIPE

PVC-U PRESSURIZEDPORTABLE WATER PIPES

PVC-U DRAINAGE PIPES

EYDO PIPE

CERTIFICATES

CERTIFICATES

+GF+

hakan PLASTiK

Manufacturing its products in accordance with the European standards and Turkish tandards equivalent to the European standards, our Company is a leading and dynamic organization in terms of continous improvement and customer satisfaction.

Some of the product quality certificates of our Company are as follows:

DVGW (Germany) - SKZ (Germany) - Hygiene Institute (Germany) - Fraunhofer (Germany) - Nordic Polymark (Sweden) - AENOR (Spain) - UkrSepro (Ukraine) - GOST (Russia) - SABS (South Africa) - TSE (Turkey)

Presenting its product standards in a way that offers the quality and continuity required for customers, GF Hakan Plastik exports its products to over 70 countries based on these certificates.

In addition to product quality, the process and system quality of GF Hakan Plastik is certified by BVQI through TS EN ISO 9001:2015 certificate and the company maintains its efforts on certification. Our Company that places top priority on process and system quality also has TS EN ISO 14001:2015 and TS EN ISO 45001:2018 certificates. Our both two production plants in Çerkezköy and Şanlıurfa have TS EN ISO/IEC 17025:2017 laboratory accreditation certificates awarded by TÜRKAK organization.

TURKEY- TSE	SCANDINAVIAN COUNTRIES SWEDCERT	TURKEY TÜRKAK	RUSSIA-BELARUS UKRAINE GOST-r
SPAIN AFITI LICOF	GERMANY DIN CERTCO	SWITZERLAND SGS	RUSSIA-BELARUS KAZAKHSTAN-KYRYGYZSTAN ARMENIA
UKRAINE UKR - SEPRO	NETHERLANDS KIWA	BULGARIA BULGARKONTROLA	UK WRAS
UKRAINE HYGIENE	SCANDINAVIAN COUNTRIES SWEDCERT KIWA	HUNGARY HUNGARY - EMI	RUSSIA HYGIENE
BUREAU VERITAS	SOUTH AFRICA SABS	GERMANY- RUSSIA HYGENE INSTITUT	GERMANY HOCH
SOUTH AFRICA SANAS	UK LLOYD'S REGISTER	TURKEY EUROGAP	BULGARIA NJN
TURKEY YILDIZ TECHNICAL UNIVERSITY REPORT	MALAYSIA IKRAM QA	GERMANY DVGV	GERMANY DIBT
UNITED STATES OF AMERICA NSF	GERMANY FRAUNHOFER INSTITUTE	SPAIN AENOR	STN TC

+GF+
hakan
PLASTiK

+GF+
EYDO PIPE

Corrugated
Piping Systems

GF Hakan Plastik Corrugated piping system is produced in two-layers from high density polyethylene (HDPE) according to EN 13476-3 standard.

• Product range consists of 100 mm to 1000 mm pipes with or without socket and fittings
• Double layer structure increases the hardness of pipe. With its specially designed frame structure, it is quite resistant to heavy soil and traffic loads
• Smooth internal surface prevents deposition of solid wastes. Offers superior hydraulic capacity
• Can be used in underground drainage systems and areas with intense traffic load
• Resistant to temperature changes and chemicals and suitable for transfers of acidic liquids
• Flexible, suitable for easy use and installation
•Does not cause leaking and abrasion, demonstrates high resistance

Fields of Application

Drainage Systems
- All underground and aboveground discharge systems
- Sewage systems
- Industrial waste water drainage systems
- Domestic waste water drainage systems
- Drainage and ground waters transfer lines
- Non-pressurized water transmission systems
- Discharge systems
- Rainwater discharge systems

Exhaust Gas Systems
- Used for transfer of waste gas in industrial areas

Chemical Transfer Systems
- Industrial areas (Short and long term use)

Rainwater Management Systems
- Used for blocking, retaining and filtering purposes

Technical Properties

Diameters [mm]	d100 mm - d1000 mm / Perforated d100 mm, d150 mm, d200
Ring Stiffness	SN4 and SN8
Pipe Length [m]	7 m and 6 m
Jointing method	Sealed Rubber gasket Push-fit
Color	Outer layer: Black / Inner layer: Blue - SN4 Orange stripe, SN8 Blue stripe
Chemical Resistance	Resistant to organic and inorganic chemical environments for pH values between 2 and 12
Installation Temperature	Minimum: -10°C Maximum: 35°C
Operating Temperature	Minimum: -10°C Maximum: 35°C
Standard	EN 13476-3
Approvals and Certificates	**Russia:** GOST, **Poland:** REKOMENDACJA, **Ukraine:** SEPRO, **Turkey:** TSE

Corrugated

Corrugated Pipe with Muff HDPE - SN4

Dia. [mm]	Leng. [m]	SN	Code
150	6	4	**5210015002731**
200	6	4	**5210020002631**
300	6	4	**5210030000131**
400	6	4	**5210040000131**
500	6	4	**5210050000131**
600	6	4	**5210060001231**

Corrugated Pipe with Muff HDPE - SN8

Dia. [mm]	Leng. [m]	SN	Code
150	6	8	**5210015000531**
200	6	8	**5210020000631**
300	6	8	**5210030000731**
400	6	8	**5210040000931**
500	6	8	**5210050001031**
600	6	8	**5210060001031**

Corrugated Pipe without Muff HDPE - SN4

Dia. [mm]	Leng. [m]	SN	Code
150	6	4	**5210015001231**
200	6	4	**5210020001331**
300	6	4	**5210030001431**
400	6	4	**5210040002431**
500	6	4	**5210050001831**
600	6	4	**5210060005331**
800	6	4	**5210080000631**
1000	6	4	**5210090100731**

Corrugated Pipe without Muff HDPE - SN8

Dia. [mm]	Leng. [m]	SN	Code
100	6	8	**5210010000231**
150	6	8	**5210015001931**
200	6	8	**5210020001931**
300	6	8	**5210030002031**
400	6	8	**5210040002231**
500	6	8	**5210050002131**
600	6	8	**5210060001931**
800	6	8	**5210080000331**
1000	6	8	**5210090100531**

Corrugated Pipe Gasket

Dia. [mm]	Code	Packing Type	Packing Pc
100	**5410910010092**	Parcel	1000
150	**5410915010192**	Parcel	1000
200	**5410920010292**	Parcel	300
300	**5410930010491**	Parcel	40
400	**5410940010591**	Parcel	20
500	**5410950010691**	Parcel	20
600	**5410930010791**	Parcel	15
800	**5410980010892**	Parcel	-
1000	**5410990110892**	Parcel	-

Corrugated Pipe with Internal Muff HDPE - SN4

Dia. [mm]	Leng. [m]	SN	Code
800	6	4	**5210080000131**
1000	6	4	**5210090100131**

Corrugated Pipe with Internal Muff HDPE - SN8

Dia. [mm]	Leng. [m]	SN	Code
800	6	8	**5210080000231**
1000	6	8	**5210090100231**

Perforated Corrugated Pipe without Muff HDPE- SN4

Dia. [mm]	Leng. [m]	SN	Code
150	7	4	**5210015000331**
200	7	4	**5210020000431**

Perforated Corrugated Pipe without Muff HDPE - SN8

Dia. [mm]	Leng. [m]	SN	Code
100	7	8	**5210010000931**
150	7	8	**5210015001131**
200	7	8	**5210020001131**

Telecommunication Pipe HDPE - SN8

Dia. [mm]	SN	Code
100	8	**7410011030031**

Elbow 45⁰

Dia. [mm]	Code
150	**5310115000131**
200	**5310120000231**
300	**5310130000431**
400	**5310140000531**
500	**5310150000631**

Corrugated

Elbow 90°

Dia. [mm]	Code
150	**5310115000831**
200	**5310120000931**
300	**5310130001131**
400	**5310140001231**
500	**5310150001331**

Branch with Corrugated Outlet 45°

Dia. [mm]	Code
150x150	**5310215000131**
200x150	**5310220000231**
200x200	**5310220000331**
300x150	**5310230000731**
300x200	**5310230000831**
400x200	**5310240001031**
500x200	**5310250001231**
600x200	**5310260001331**

Tee Branch with Corrugated Outlet 90°

Dia. [mm]	Code
150x150	**5310215002431**
200x150	**5310220002531**
200x200	**5310220002631**
300x150	**5310230003031**
300x200	**5310230003131**
400x150	**5310240003331**
400x200	**5310240003431**
400x400	**5310240003631**
500x150	**5310250003731**
500x200	**5310250003831**
600x150	**5310260004131**

Branch with PVC Outlet 45°

	Dia. [mm]	Code
	150x160	**5310215001531**
	200x160	**5310220001631**
PP	200x200	**5110220001721**
	300x160	**5310230001831**
PP	300x200	**5110230001921**
PP	400x200	**5110240002021**
PP	500x200	**5110250021721**

Corrugated Support

Dia. [mm]	Code	Packing Type	Packing Pc
100 (Single)	**5110911020121**	Parcel	140
100 (Double)	**5110911020021**	Parcel	70

Excentric Reducer

Dia. [mm]	Code
200x150	**5310420000331**
300x200	**5310430000531**
400x200	**5310440000731**
400x300	**5310440000831**
500x400	**5310450000931**
600x500	**5310460001031**

Pipe Plug

Dia. [mm]	Code
150	**5310915000131**
200	**5310920000231**
300	**5310930000431**
400	**5310940000531**
500	**5310950000631**
600	**5310960000731**

Socket

Dia. [mm]	Code
150	**5310515000131**
200	**5310520000231**
300	**5310530000431**
400	**5310540000531**
500	**5310550000631**
600	**5310560000731**
800	**5310580000832**
1000	**5310590100932**

Telecommunicaion Pipe Socket

Dia. [mm]	Code
100	**7510511000131**

PVC-U Drainage
Piping Systems

GF Hakan Plastik Drainage Piping Systems are produced in two options as perforated and unperforated pipes in accordance with TS 9128 standard.

Fields of Application

- Removal of harmful waters in agricultural lands
- Foundation drainage of construction site
- Reclamation of muddy and argilliferous lands
- Reclamation of highway shoulders
- Removal of base water in the structures that have base water
- Drainage of sports areas
- Drainage of emergency lanes
- Railway drainage applications
- Irrigation infrastructure drainage applications
- All drainage applications in airports, schools, hospitals, hotels, mass housing projects, golf courts and industrial buildings.

Technical Properties

Structure	One Layered, perforated and unperforated
Diameters [mm]	d100, d125, d160, d200
Pipe Length [m]	50 and 100 meters in the form of coil
Color	Yellow
Approvals and Certificates	**Turkey**: TSE

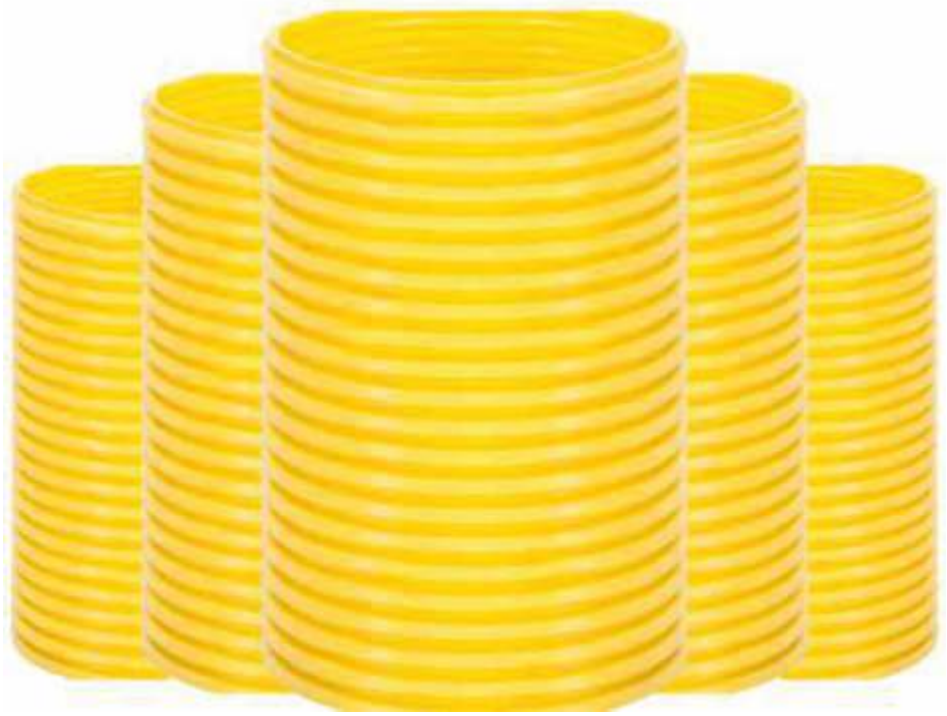

PVC-U Drainage

Drainage Pipe - Perforated

Dia. [mm]	Code	Packing Type	Packing Meter
100	**2205011000111**	Coil	100
125	**2205012500211**	Coil	100
160	**2205016000311**	Coil	50
200	**2205020000411**	Coil	50

Drainage Pipe - Unperforated

Dia. [mm]	Code	Packing Type	Packing Meter
100	**2205011001011**	Coil	100
125	**2205012501111**	Coil	100
160	**2205016001211**	Coil	50
200	**2205020001311**	Coil	50

Drainage Branch 45°

Dia. [mm]	Code	Packing Type	Packing Pc
125-125	**2305212502111**	Bundle	2
160-160	**2305216002211**	Bundle	2
200-200	**2305220002311**	Bundle	2

Drainage Elbow 45°

Dia. [mm]	Code	Packing Type	Packing Pc
125	**2305112500311**	Bundle	2
160	**2305116000511**	Bundle	2
200	**2305120000711**	Bundle	2

Drainage Socket

Dia. [mm]	Code	Packing Type	Packing Pc
100	**2305511004011**	Cartonbox	25
125	**2305512504111**	Cartonbox	19
160	**2305516004211**	Cartonbox	8
200	**2305520004311**	Cartonbox	5

Drainage Elbow 87,5°

Dia. [mm]	Code	Packing Type	Packing Pc
125	**2305112500411**	Bundle	2
160	**2305116000611**	Bundle	2
200	**2305120000811**	Bag	2

Drainage Branch 87,5°

Dia. [mm]	Code	Packing Type	Packing Pc
125-125	**2305212502511**	Bundle	2
160-160	**2305216002611**	Bundle	2
200-200	**2305220002711**	Bundle	2

Polyethylene
Piping Systems

Developed by GF Hakan Plastik to meet the increasing needs for PE pipes around the world, these piping systems are mostly used in underground gas and water lines and stand out with their lightweight, easy and secure installation characteristics.

They are produced in two types as high and low density for gas and water systems:

PE Piping Systems used for water transfer are classfied as follows by the type of raw material used for production:

- PE 32 - Low Density Piping Systems
- PE 100 - High Density Piping Systems
- PE 100 RC - High Density Piping Systems Resistant to Cracks

PE Piping Systems used for gas transfer are classfied as follows by the type of raw material used for production:

- PE 80 - Medium Density Piping Systems
- PE 100 - High Density Piping Systems

• Welding methods such as electrofusion, butt and socket can be jointed quickly and practically.
• Produced in accordance with TS EN 12201-2, TS EN 1555-2 standards.

Technical Properties

Diameter Ranges [mm]	d20 - d110 mm for PE 32 d20 - d400 mm for PE 80 d20 - d630 mm for PE 100 d200 - d500 mm for PE 100 RC
Pressure Classes	PN6 and PN10 for PE 32 and PE 80 PN4 - PN5 - PN6 - PN8 - PN10 - PN12,5 - PN16 - PN20 - PN25 for PE 100 and PE 100 RC
Operating Temperature Range	-40°C - 40°C
Connection Type	Electrofusion Welding, Butt Welding, Socket Fusion Welding, Flanged Connection, Mechanical Connection
Thermal Expansion Coefficient	0,18 mm/m°K
Approvals and Certificates	**Turkey**: TSE, **Germany**: DVGW, HYGIENE, **America**: NSF, UK: WRAS, **Russia**: HYGIENE, **Bulgaria**: NJN

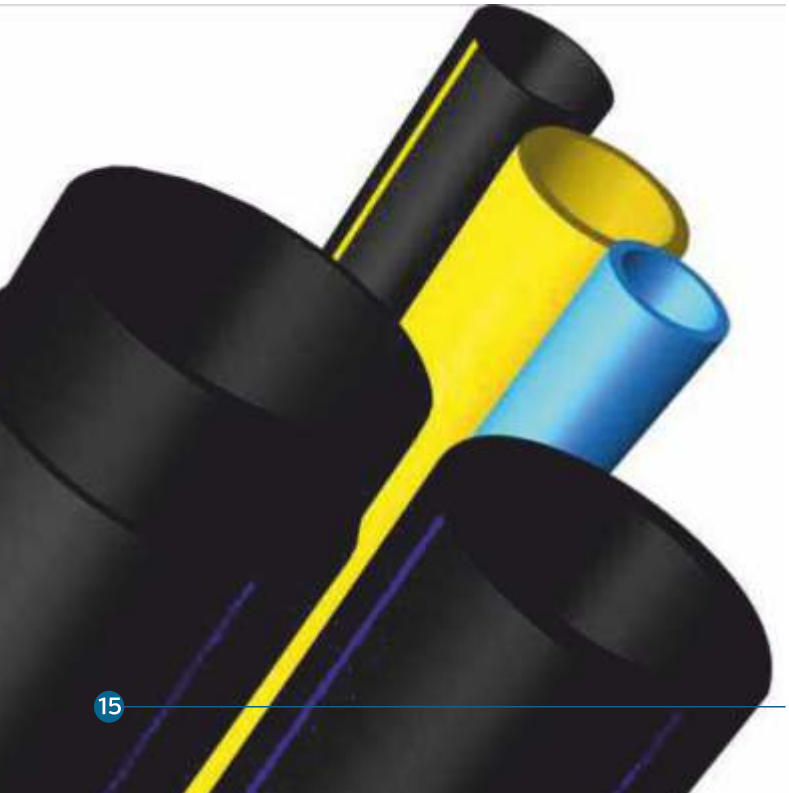

Fields of Application

• Pressurized drinking water network
• Waste water discharge and waste water pumping lines
• Irrigation systems, undersea passage lines and deep sea discharges
• Underground fire extinguishing systems (Hydrant lines)
• Cooling water systems
• Telecommunication systems and mining
• Natural Gas Transport, LPG Systems

Polyethylene

Wall Thicknesses of Polyethylene Pipes according to (PE100) TS EN 12201-2 Standard

Dia. [mm]	PN4 SDR41	PN5 SDR33	PN6 SDR26	PN8 SDR21	PN10 SDR17	PN12,5 SDR13,6	PN16 SDR11	PN20 SDR9	PN25 SDR7,4
20	-	-	-	-	-	-	2	2,3	3
25	-	-	-	-	-	2	2,3	3	3,5
32	-	-	-	-	2	2,4	3	3,6	4,4
40	-	-	-	2	2,4	3	3,7	4,5	5,5
50	-	-	2	2,4	3	3,7	4,6	5,6	6,9
63	-	-	2,5	3	3,8	4,7	5,8	7,1	8,6
75	-	-	2,9	3,6	4,5	5,6	6,8	8,4	10,3
90	-	-	3,5	4,3	5,4	6,7	8,2	10,1	12,3
110	-	-	4,2	5,3	6,6	8,1	10	12,3	15,1
125	-	-	4,8	6	7,4	9,2	11,4	14	17,1
140	-	-	5,4	6,7	8,3	10,3	12,7	15,7	19,2
160	-	-	6,2	7,7	9,5	11,8	14,6	17,9	21,9
180	-	-	6,9	8,6	10,7	13,3	16,4	20,1	24,6
200	-	-	7,7	9,6	11,9	14,7	18,2	22,4	27,4
225	-	-	8,6	10,8	13,4	16,6	20,5	25,2	30,8
250	-	-	9,6	11,9	14,8	18,4	22,7	27,9	34,2
280	-	-	10,6	13,4	16,6	20,6	25,4	31,3	38,3
315	7,7	9,7	12,1	15	18,7	23,2	28,6	35,2	43,1
355	8,7	10,9	13,6	16,9	21,1	26,1	32,2	39,7	48,5
400	9,8	12,3	15,3	19,1	23,7	29,4	36,3	44,7	54,7
450	11	13,8	17,2	21,5	26,7	33,1	40,9	50,3	61,5
500	12,3	15,3	19,1	23,9	29,7	36,8	45,4	55,8	-
560	13,7	17,2	21,4	26,7	33,2	41,2	50,8	62,5	-
630	15,4	19,3	24,1	30	37,4	46,3	57,2	70,3	-

PE80

Dia. [mm]	SDR11
20	*
25	*
32	*
40	*
50	*
63	*
50	*
75	*
90	*
110	*
125	*
140	*
160	*
180	*
200	*

Low Density PE32 - 6 bar

Dia. [mm]	Code	Packing Type	Packing (m)
20	**6806002000131**	Coil	25
25	**6806002500231**	Coil	100
32	**6806003200331**	Coil	100
40	**6806004000431**	Coil	100
50	**6806005000531**	Coil	100
63	**6806006300631**	Coil	100
75	**6806007500731**	Coil	100

Low Density PE32 - 10 bar

Dia. [mm]	Code	Packing Type	Packing (m)
20	**6806002002031**	Coil	150
25	**6806002502131**	Coil	100
32	**6806003202231**	Coil	100
40	**6806004002331**	Coil	100
50	**6806005002431**	Coil	100
63	**6806006302531**	Coil	100
75	**6806007502631**	Coil	100

PVC-U

Pressurized Potable Water Piping Systems

Demonstrates excellent resistant to aggressive environments that occur as a result of both natural and industrial operations.

• They are resistant to almost all chemical or electrochemical corrosion types in the nature.
• Adhesion and socket type connection options are available.
• Hygienic, does not cause bacteria and odor.
• Fire resistant, ensures safety in both domestic and industrial installations.
• PVC-U pipes made of tasteless and odor-free material remain neutral and inert for all liquids transported.
• They are produced in two types:
  - Pipes with Solvent Cementing
  - Pipes with Rubber Gasket (Push-Fit) Socket
• Pipes with diameter d20-d110 mm are made as sement adhesion socket while pipes with diameter d63-500 are made as rubber gasket (Push-Fit) socket.
• Fast and easy installation.
• Minimum maintenance costs.
• Prevents residues thanks to its smooth and even internal surface.
• Ensures additional safety when using in both domestic and industrial power installations as they are fire resistant.
• Produced in accordance with TS EN 1452-2 standards.

Fields of Application

• Pressurized water networks, supply of urban drinking water
• Pipelines for ventilation systems, swimming pool facilities
• Transfer of acids, alkalis and harmful chemicals
• Pumped waste water networks
• Industrially-treated liquids and industrial waste discharge
• Network and cable system installation
• Supply of water in agricultural irrigation and rural areas.

Technical Properties

Diameters [mm]	d20 - d500 mm
Pressure Classes	PN6 - PN8 - PN10 - PN12,5 - PN16 - PN20
Operating Temperature Range	0°C - 60°C
Connection Type	Rubber gasket (Push-Fit) socket and solvent cementing
Color	Black
Approvals and Certificates	**Turkey:** TSE, **Russia:** GOST, **Ukraine:** SEPRO, HYGIENE

PVC Pressurized Potable Water Pipes

Nominal External Diameter	Pipe Ranges (S)						
	Nominal wall thickness						
	S20	**S16**	**S12,5**	**S10**	**S8**	**S6,3**	**S5**
	(SDR 41)	(SDR 33)	(SDR 26)	(SDR 21)	(SDR 17)	SDR (13,6)	SDR (11)
	Nominal pressures PN, determined based on service (design) coefficient as C=2,5						
d_n		**PN6**	**PN8**	**PN10**	**PN12,5**	**PN16**	**PN20**
20	-	-	-	-	-	1,5	1,9
25	-	-	-	-	1,5	1,9	2,3
32	-	-	1,5	1,6	1,9	2,4	2,9
40	-	1,5	1,6	1,9	2,4	3	3,7
50	-	1,6	2,0	2,4	3	3,7	4,6
63	-	2,0	2,5	3	3,8	4,7	5,8
75	-	2,3	2,9	3,6	4,5	5,6	6,8
90	-	2,8	3,5	4,3	5,4	6,7	8,2
	Nominal pressures[a], PN, determined based on service (design) coefficient as C=2,0						
d_n	**PN6**	**PN8**	**PN10**	**PN12.5**	**PN16**	**PN20**	**PN25**
110	2,7	3,4	4,2	5,3	6,6	8,1	10,0
125	3,1	3,9	4,8	6,0	7,4	9,2	11,4
140	3,5	4,3	5,4	6,7	8,3	10,3	12,7
160	4	4,9	6,2	7,7	9,5	11,8	14,6
180	4,4	5,5	6,9	8,6	10,7	13,3	16,4
200	4,9	6,2	7,7	9,6	11,9	14,7	18,2
225	5,5	6,9	8,6	10,8	13,4	16,6	-
250	6,2	7,7	9,6	11,9	14,8	18,4	-
280	6,9	8,6	10,7	13,4	16,6	20,0	-
315	7,7	9,7	12,1	15,0	18,7	23,2	-
355	8,7	10,9	13,6	16,9	21,1	26,1	-
400	9,8	12,3	15,3	19,1	23,7	29,4	-
450	11	13,8	17,2	21,5	26,7	33,1	-
500	12,3	15,3	19,1	23,9	29,7	36,8	-

[a] The upper pressure class, PN, should be selected to take total service (design) coefficient as 2,5 (instead of 2,0) for the pipes with nominal diameter above 90 mm.

Note 1 - Nominal wall thicknesses comply with ISO 4065.

Not 2 - S20 ve S16 için PN 6 değerleri, tercih edilen sayı olarak 6,3 alınarak hesaplanır

PVC Pressurized Water Pipe Gasket

Dia. [mm]	Code	Packing Type	Packing (m)
63	**1710906300192**	Parcel	600
75	**1710907500292**	Parcel	350
90	**1710909000392**	Parcel	250
110	**1710911000492**	Parcel	200
125	**1710912500592**	Parcel	200
140	**1710914000692**	Parcel	175
160	**1710916000792**	Bag	150
200	**1710920000892**	Parcel	250
225	**1710922500992**	Bag	75
250	**1710925001092**	Parcel	100
280	**1710928001192**	Parcel	50
315	**1710931501292**	Parcel	40
355	**1710935501392**	Parcel	30
450	**1710940001492**	Parcel	25
450	**1710945001692**	Parcel	10
500	**1710950001592**	Parcel	15

PVC-U

Deep Well Pipes and Fittings

Demonstrates excellent resistant to aggressive environments that occur as a result of both natural and industrial operations.

- GF Hakan Plastik Deep Well and Drilling pipes are made in single layer out of PVC-U material in accordance with TS 11794 standard
- Thanks to their special formulation, deep well pipes meet well pressures safely. Produced in two types as flat and filtered
- Their special design prevents incrustation that causes clogging of filters
- As buttress gears on the both ends of pipes are released once at the same time, they ensure quick and easy assembly during the installation of pipes, and as they have one center, they allow for proper graveling and pump installation thanks to the equal gap around them
- They are lighter and easier to apply than steel pipes
- Cost-effective in terms of operational continuity
- High resistance to impacts
- Smooth and glossy surface
- No corrosion, durable
- Practicality in workmanship and saving on installation time

Technical Properties

Diameters [mm]	d88 - d330
Pipe Length [mm]	2 m - 3 m - 4 m
Jointing method	Threaded
Color	Light Grey
Installation	Very easy to install as it is lightweight
Chemical Resistance	Resistant to organic and inorganic chemical environments for pH values between 2 and 12
Standard	TS 11794
Installation Temperature	Minimum: -10°C Maximum: 60°C
Operating Temperature	Minimum: -10°C Maximum: 60°C
Approvals and Certificates	**Russia:** GOST, **Ukraine:** SEPRO - HYGIENE, **Turkey:** TSE

Fields of Application

- This is a type of pipe used for the wells drilled to extract underground waters

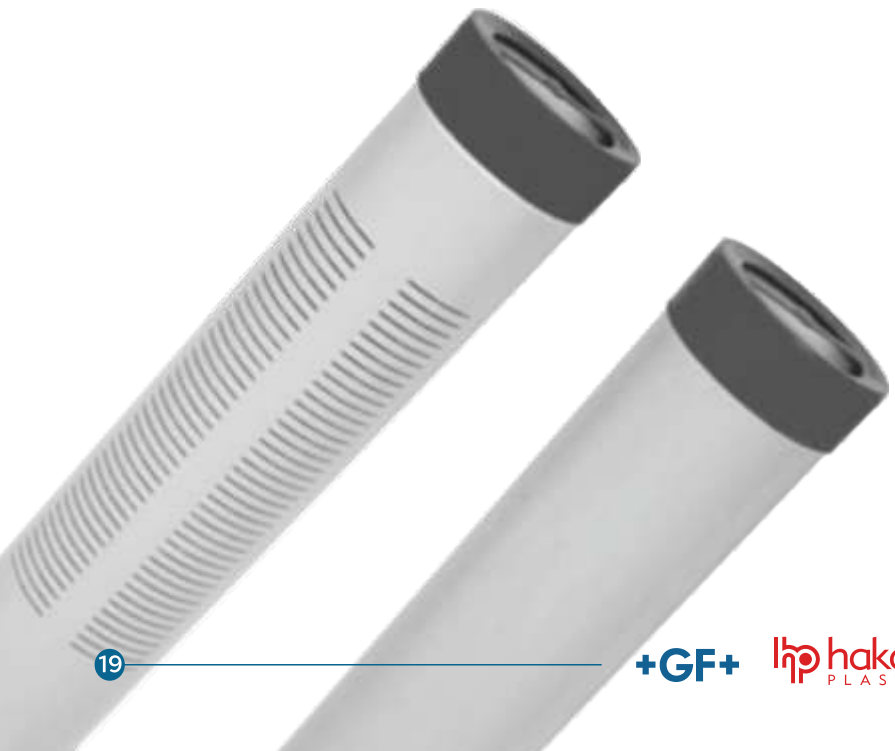

Spur

Dia. [mm]	Code
88	**1900908801211**
113	**1900911301311**
125	**1900912501411**
140	**1900914001511**
175	**1900917501611**
200	**1900920001711**
225	**1900922501811**
280	**1900928001911**

Reduction

Dia. [mm]	Code
88-113	**1900408800111**
113-125	**1900411300211**
125-140	**1900412500311**
140-175	**1900414000411**
175-200	**1900417500511**
200-225	**1900420000611**
225-280	**1900422500711**

Deep Well Pipes

Flat Type Deep Well Pipe / 0-100 m Depth (C3)

Dia. [mm]	Leng. [mm]	Code	Packing Type	Packing Pc
88	2000	**1800008800111**	Length	1
88	3000	**1800008800211**	Length	1
88	4000	**1800008800311**	Length	1
113	2000	**1800011301011**	Length	1
113	3000	**1800011301111**	Length	1
113	4000	**1800011301211**	Length	1
125	2000	**1800012502011**	Length	1
125	3000	**1800012502111**	Length	1
125	4000	**1800012502211**	Length	1
140	2000	**1800014003011**	Length	1
140	3000	**1800014003111**	Length	1
140	4000	**1800014003211**	Length	1
175	2000	**1800017504011**	Length	1
175	3000	**1800017504111**	Length	1
175	4000	**1800017504211**	Length	1
200	2000	**1800020005011**	Length	1
200	3000	**1800020005111**	Length	1
200	4000	**1800020005211**	Length	1
225	2000	**1800022506011**	Length	1
225	3000	**1800022506111**	Length	1
225	4000	**1800022506211**	Length	1
280	2000	**1800028007011**	Length	1
280	3000	**1800028007111**	Length	1
280	4000	**1800028007211**	Length	1
330	2000	**1800033008111**	Length	1
330	3000	**1800033008211**	Length	1
330	4000	**1800033008311**	Length	1

Filter Type Deep Well Pipe / 0-100 m Depth (C3)

Dia. [mm]	Leng. [mm]		Packing Type	Packing Pc
88	2000	**1800008829011**	Length	1
88	3000	**1800008829111**	Length	1
88	4000	**1800008829211**	Length	1
113	2000	**1800011330011**	Length	1
113	3000	**1800011330111**	Length	1
113	4000	**1800011330211**	Length	1
125	2000	**1800012531011**	Length	1
125	3000	**1800012531111**	Length	1
125	4000	**1800012531211**	Length	1
140	2000	**1800014032011**	Length	1
140	3000	**1800014032111**	Length	1
140	4000	**1800014032211**	Length	1
175	2000	**1800017533011**	Length	1
175	3000	**1800017533111**	Length	1
175	4000	**1800017533211**	Length	1
200	2000	**1800020034011**	Length	1
200	3000	**1800020034111**	Length	1
200	4000	**1800020034211**	Length	1
225	2000	**1800022535011**	Length	1
225	3000	**1800022535111**	Length	1
225	4000	**1800022535211**	Length	1
280	2000	**1800028036011**	Length	1
280	3000	**1800028036111**	Length	1
280	4000	**1800028036211**	Length	1
330	2000	**1800033037011**	Length	1
330	3000	**1800033037111**	Length	1
330	4000	**1800033037211**	Length	1

Flat Type Deep Well Pipe / 0-300 m Depth (C2)

Dia. [mm]	Leng. [mm]	Code	Packing Type	Packing Pc
88	2000	**1800008800411**	Length	1
88	3000	**1800008800511**	Length	1
88	4000	**1800008800611**	Length	1
113	2000	**1800011301311**	Length	1
113	3000	**1800011301411**	Length	1
113	4000	**1800011301511**	Length	1
125	2000	**1800012502311**	Length	1
125	3000	**1800012502411**	Length	1
125	4000	**1800012502511**	Length	1
140	2000	**1800014003311**	Length	1
140	3000	**1800014003411**	Length	1
140	4000	**1800014003511**	Length	1
175	2000	**1800017504311**	Length	1
175	3000	**1800017504411**	Length	1
175	4000	**1800017504511**	Length	1
200	2000	**1800020005311**	Length	1
200	3000	**1800020005411**	Length	1
200	4000	**1800020005511**	Length	1
225	2000	**1800022506311**	Length	1
225	3000	**1800022506411**	Length	1
225	4000	**1800022506511**	Length	1
280	2000	**1800028007311**	Length	1
280	3000	**1800028007411**	Length	1
280	4000	**1800028007511**	Length	1
330	2000	**1800033008411**	Length	1
330	3000	**1800033008511**	Length	1
330	4000	**1800033008611**	Length	1

Filter Type Deep Well Pipe / 0-300 m Depth (C2)

Dia. [mm]	Leng. [mm]	Code	Packing Type	Packing Pc
88	2000	**1800008829311**	Length	1
88	3000	**1800008829411**	Length	1
88	4000	**1800008829511**	Length	1
113	2000	**1800011330311**	Length	1
113	3000	**1800011330411**	Length	1
113	4000	**1800011330511**	Length	1
125	2000	**1800012531311**	Length	1
125	3000	**1800012531411**	Length	1
125	4000	**1800012531511**	Length	1
140	2000	**1800014032311**	Length	1
140	3000	**1800014032411**	Length	1
140	4000	**1800014032511**	Length	1
175	2000	**1800017533311**	Length	1
175	3000	**1800017533411**	Length	1
175	4000	**1800017533511**	Length	1
200	2000	**1800020034311**	Length	1
200	3000	**1800020034411**	Length	1
200	4000	**1800020034511**	Length	1
225	2000	**1800022535311**	Length	1
225	3000	**1800022535411**	Length	1
225	4000	**1800022535511**	Length	1
280	2000	**1800028036311**	Length	1
280	3000	**1800028036411**	Length	1
280	4000	**1800028036511**	Length	1
330	2000	**1800033037311**	Length	1
330	3000	**1800033037411**	Length	1
330	4000	**1800033037511**	Length	1

INSTALLATION INSTRUCTIONS

+GF+ hakan PLASTiK

INSTALLATION INSTRUCTIONS

- CORRUGATED PIPES AND FITTINGS
- POLYETHYLENE PIPES AND FITTINGS
- PVC-U DEEP WELL PIPES AND FITTINGS
- PVC-U PRESSURIZED POTABLE WATER PIPING SYSTEMS
- PVC-U DRAINAGE PIPING SYSTEMS

Corrugated Pipes and Fittings

1. Corrugated Pipes and Fittings are produced as self socketed.
2. For easy installation, lubricating liquids (silicone-based liquid) should be applied on the sealed and socketed parts before jointing process. Do not use mineral oils and chemicals such as liquid soap etc. that might damage rings.
3. For sealed jointing, one side of the ring suitable for pipe diameter is placed into the second groove of the pipe. The other part is fitted into the slot manually or by using a jimmy.
4. The final form of the ring should be in a way that the part looking like a dome stays outside.
5. Make sure that the pipes are equally aligned prior to installation.
6. Pipes are jointed in flat angle by pushing with the aid of a construction equipment, with the small size pipes being placed manually or by a lever and the big size pipes being fitted by placing a wooden support part to the end of the pipe.

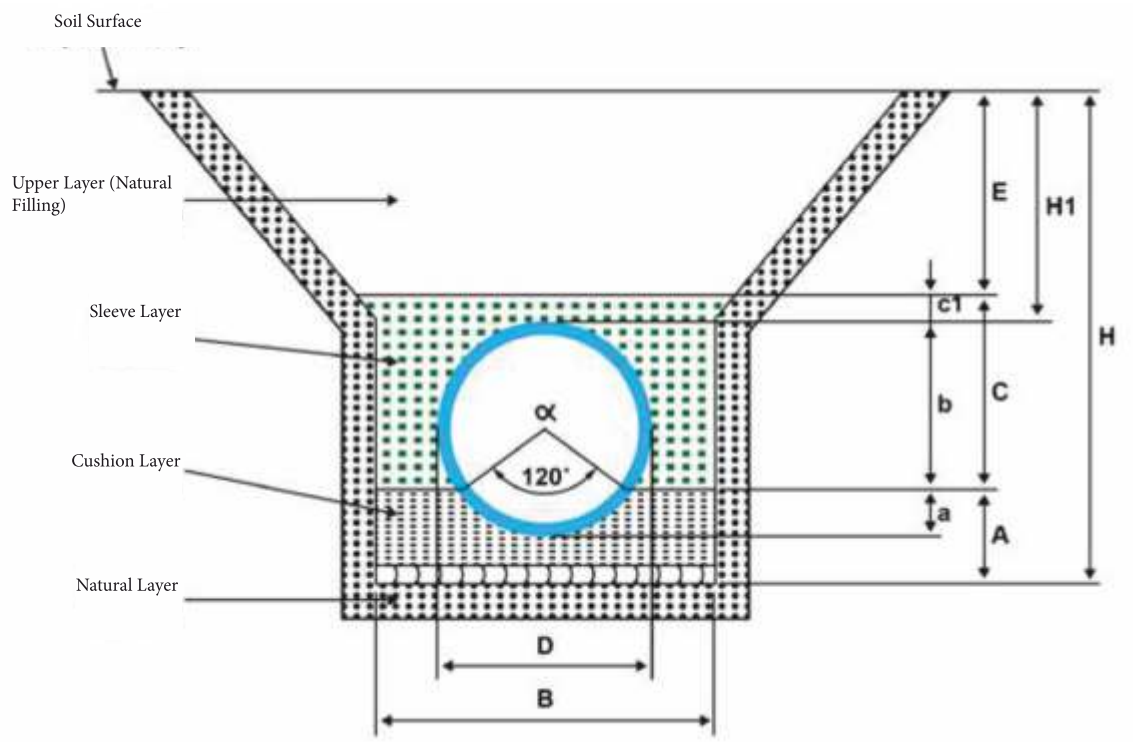

A	:	Cushion layer (When ground reclamation is required, max 100 mm coarse grained material or concrete)
B	:	Trench width (D+400 mm)
C	:	Sleeve layer
D	:	Pipe diameter mm
c1	:	Upper sleeve layer (Min 300 mm)

a	:	0.25xD
b	:	0.75xD
E	:	Upper layer (Min 500 mm)
H1	:	Distance between upper point of pipe and floor
α	:	Bedding angle

In underground applications where trench is drilled, the trench should be filled by means of compacting in layers so that no weak areas are left around the pipes in order to use corrugated pipes and fittings smoothly for long years. It is particularly important to fill the base of the pipes with filler. If the filling process is carried out by compacting them properly according to the specifications, traffic and soil loads on the pipes will be partly transferred to the filler and the pipes will continue to serve smoothly during their lifetime. If they are not properly compacted, gaps will occur and the pipes will fail to transfer the load to the other forces, resulting in the risk of collapse.

Polyethylene Pipes and Fittings

• The installation rules of the PE pipes should be in compliance with ATV-A 127 and EN 805 standards.
• Pipes should be protected against deformation during the application and the pipes damaged during transport - storage should never be used.
• There should be no accumulation of underground water or rainwater inside the duct. Otherwise, such water should be discharged by using a pump.
• It is suitable to use incohesive sands, gravels, mixed grained sands and gravels as filler.
• Depth of duct may vary depending upon the weather conditions. It should be minimum 70-80 cm.
• If the soil generated during excavation is suitable, there is no need for bedding and the duct is filled. If the soil is not suitable (stony or wet), the height of the duct should be increased and bedding should be carried out on the base by using dry filler.
• Bedding thickness should be minimum C1 = 100 mm + 1/10 DN. 95% compacting should be ensured by using a compactor on the bedding material.
• Side fillers of pipes should be poured with C2 = 30 cm thickness and 95% compacting should be ensured by a compactor. This process should be carried out every 30 cm until it covers 30 cm above the pipe.
• After it covers C3=30 cm on the pipe, filling process should be completed by compacting it with the aid of a mid-power compactor.

Placement of the Pipe in the Duct

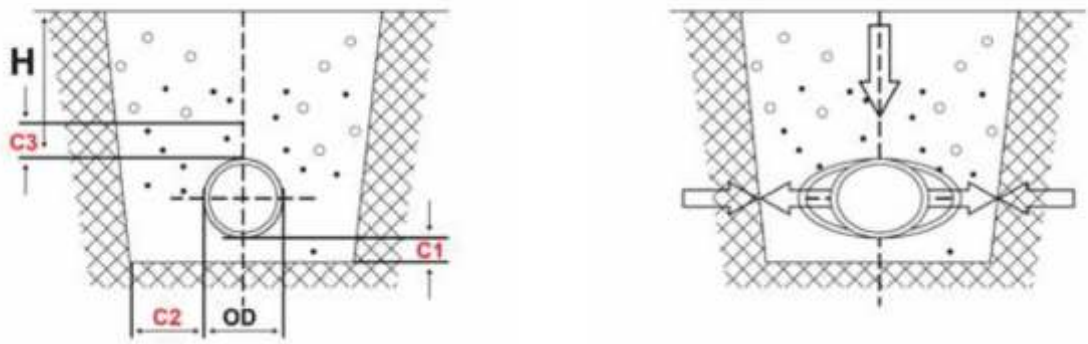

Jointing Methods of Polyethylene Pipes

Butt Welding

Butt welders consist of 4 units:

1-Main Hydraulic Body: Ensures the fixed connection for the purpose of welding polyethylene pipes or fittings.
2- Hydraulic Board (Unit): Unit that ensures welding pressures required so that the welding surfaces have the suitable welding parameters and pressures.
3-Trimming Unit: Relevant surfaces should be smooth for welding. Trimming unit removes the residues on the butt surfaces through its blades and makes the surfaces suitable for welding.
4-Heating Coil: Surfaces are heated with appropriate temperatures so that they can adhere homogeneously, and the raw material is melted according to the desired standards.

Preparations for Butt Welding:

Before butt welding, special attention should be paid to the following points and butt welding should not be initiated without fulfilling these conditions.
a-The temperature of heating coil should be checked. It should be ensured that the temperature is distributed homogeneously.
b-The surface of heating coil should be clean prior to welding.
c-Polyethylene pipes should be properly connected to the welder. There should be no axial run-out.
d-Surfaces should be smooth for welding process. Avoid hand contact on the trimmed surfaces.

Application of Butt Welding:

Before starting the welding process, the environment should be protected against unsuitable weather conditions (extreme moisture, dust, temperature below +5°C). It is recommended to use welding tent in the environments below +5°C.

Wind, sunlight and moisture might cause improper heating in the welding area. This would negatively affect the welding quality. Welding operator should be well-trained and experienced. The pipes to be welded being of the same type material, diameter and wall thickness is one of the most appropriate welding methods.

a-Welding temperature: The temperature of the heating coil should be between 190 and 220°C. Welding times of the heating coil should be applied according to the standards.

b-Wall height:It is the wall height that occurs as a result of reclining between the heating plate and butt surfaces of the pipes at P=0,15 N/mm^2 pressure and is calculated as **0,55 mm + (0,1 x e) mm**.

e= Pipe wall thickness [mm]

c- Welding time depending upon the wall thickness:Apply the following table.

d- Jointing time:Within 9 seconds after the completion of the heating time and wall release process, heating coil is taken from the welder, and butt surfaces are jointed to each other at the required pressure according to the standard data.

e-Cooling time: Welding process is completed after waiting for the walls to cool according to the standards.

Welding Times of HDPE Pipes at 20^{0}C Ambient Temperature

Pipe Wall Thickness [mm]	Welding Pressure 0,15 N / [mm]^2 Wall Height [mm]	Heating Time 0,02 N /mm^2 [s]	Heating Iron Release time [sn]	Pipe Jointing Pressure Operating Time [s]	Cooling Time [m]
..... 4,5	0,5	 45	 5	5	6
4,5 7	1.0	45.....70	5 6	5 6	6.....10
7 12	1,5	70 120	6 8	6 8	10.....16
12 19	2,0	120 190	8 10	8 11	16.....24
19 26	2,5	190 260	10 12	11 14	24.....32
26 37	3,0	260 370	12 16	14 19	32.....45
37 50	3,5	370 500	16 20	19 25	45.....60
50 70	4,0	500 700	20 25	25 35	60.....80

Electrofusion Welding

1. Cutting the Pipes:

Pipes should be cut vertically to their own axis. For cutting process, PE pipe cutter or a saw suitable to cut plastics can be used.

Cutting the pipes improperly results in the metal windings in the sleeve not contacting the pipes in certain areas. This might cause overheating and uncontrolled flow of the melted material.

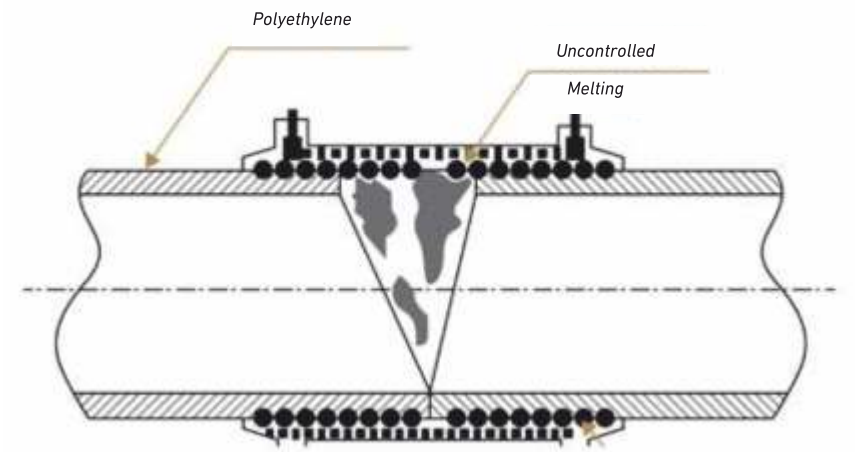

2. Marking the Welding Area

Welding area can be described as the depth in which the pipe will be fitted into the sleeve. Measure the length of sleeve and calculate the half Length of it.

Mark the half length of sleeve by + 10 mm on pipe.

3. Checking the Ovality

Any possible ovality on PE pipes should be absolutely checked. Check it at several points of pipes.

If ovality exists on the pipe, use ovality clamp.

After fitting the ovality clamp, check the ovality of pipe again, and if necessary, re-position the clamp.

4. Scraping the Pipe Surface

Before welding, shave the pipe with a scrapper to remove the oxidized layer on the surface.

To remove the oxidized layer completely, it should be scraped in a way that the marking on the pipe is removed and chips occur. Pay special attention to ensure that the scraped pipe is protected from dirt and undesired weather conditions. Chips that may occur on the pipe end should be removed by a scraper and edges should be rounded.

5. Cleaning the Welding Area

Unpack the sleeve and check it is not damaged. Avoid contacting the welding area of sleeve with dirty or oily hands.

Isopropyl alcohol could be used as cleaning substance. (Alcohol content should not be less than 96% by volume).

Use the cleaning substance by pouring it on a absorbing cloth that does not leave any particles. Cleaned surfaces should be protected from dirt and undesired weather conditions.

6. Placing the Pipe into Sleeve:

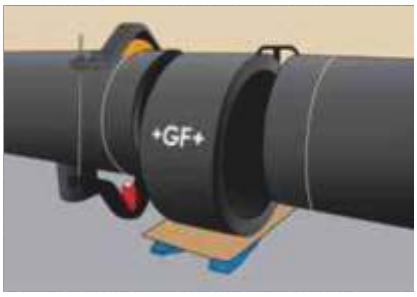

Place the sleeve in a way that it will encircle the marked area of pipe. The marked area should easily fit into the sleeve. If necessary, re-scrap the pipe.

While placing the pipe into the sleeve, ensure that the contact terminals of sleeve stay on top. Pipes should not be exposed to bending tension and should easily bear their own weight inside the sleeve. Free ends of pipes could be supported.

Likewise, prepare the other pipe end. Make sure that the pipe and sleeve are at the same axis. Check the gap between pipe and sleeve along the surrounding of the pipe. If there are local gaps, disperse the ovality with wooden parts (maximum 3 cm long) and ensure that the gaps are equal around the entire pipe. Measure the gaps. If gaps are shorter than 2 mm, proceed with electrofusion welding.

7. Electrofusion Welding:

If you have precisely followed the installation instructions step by step and there are no problems, welding process could be carried out by an universal EF welder. Place the socket ends of the welder into the contact terminals of the sleeve. Welding details are indicated on the barcode label on GF sleeve. Enter the welding details into the welder automatically with the aid of a barcode scanner or manually. Check the details on the welder screen and on the barcode. Start the welding process. Upon completion, always wait as much as cooling period. Do not move the welded area during this period of time.

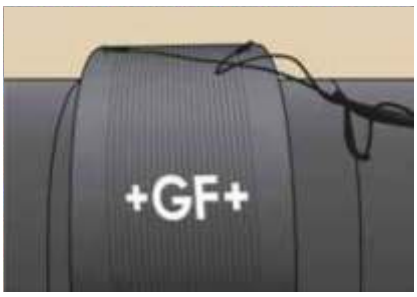

If any errors occur during welding, melted PE material might splash around. So, for safety reasons, keep away for at least 1 m during welding.

If welding is interrupted for any reasons (power supply etc), cooling times of the welded part are indicated on the barcode labels.

Flanged Jointing Methods of HDPE Pipes

Flanged jointing method generally allows for detachable connection of polyethylene pipes or polyethylene fittings. It also allows for the connection of necessary system materials such as valve-vacuum lifter-hydrant etc. to polyethylene pipes and fittings. After attaching the flange, a steel round connection component with bolt slots drilled on it, to the PE pipeline, PE part that will hold the steel round piece on the end and that is called flange adaptor on the end of the pipeline is welded by the butt welding method.

The two pipelines that will be jointed with flange are taken together and after fitting a leakproof gasket between the two sides, flanges are connected by using bolts and nuts. The significant point is to tighten the bolts by mutual sequence not by circular sequence. While tightening the bolts, it is important not to draw the pipelines in terms of extreme overloads.

Flanged Jointing method

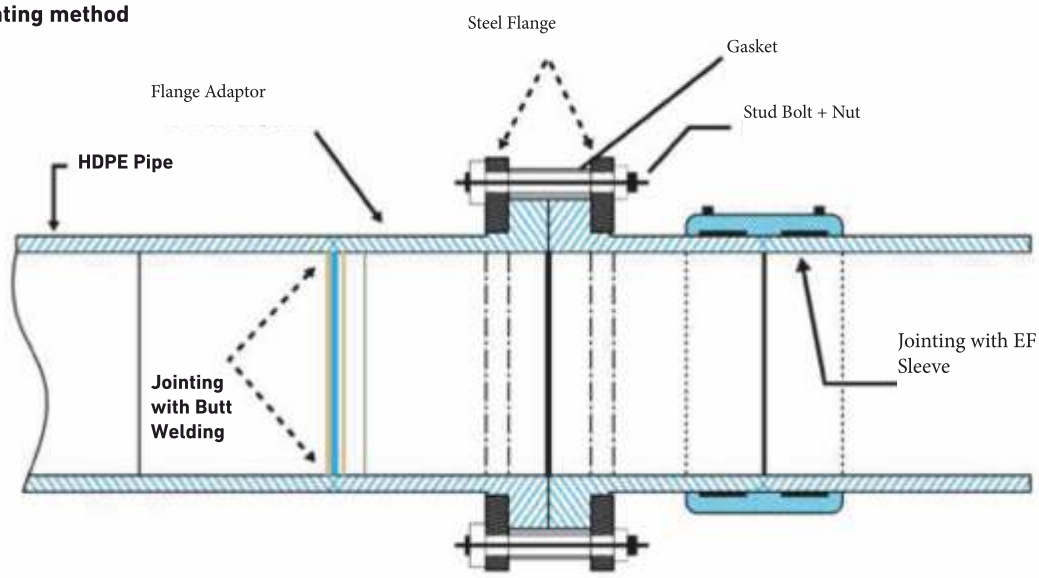

Jointing with Coupling Adaptor

After cutting the pipes that will be jointed vertically to their axis, bevelling is applied to the pipe ends at approximately 15° angle, and the pipe is rotated and pushed up to the protrusion inside the coupling.

- After placing the both pipes properly, nuts are manually tightened and connection is completed.
- If the diameter of pipe is equal to or above 40 mm, it would be more appropriate to tighten the nuts by special wrench not manually.
- Coupling adaptors are resistant to 16 bars pressure. However, it is not recommended for the pipes with diameter above 110 mm.

Method of Jointing with Coupling Adaptor

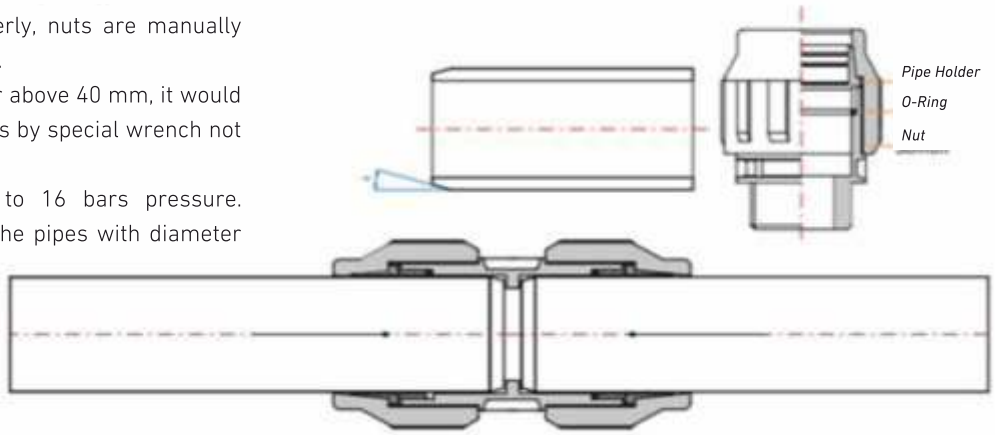

PVC-U
Deep Well Pipes and Fittings

- For the storage of pipes, measures should be taken and pipes should be protected against direct sunlight.
- Prior to installation and during the loading and transport of pipes, they should not be hit on the floor and special attention should be paid to not damage the pipe end threads. The protective part on the end of the pipes should not be removed until they are taken down to the well.
- Vertical shaft pumps or parts to be used for pump connection should not be settled down on the pipes.
- It would be sufficient to use water and soap for the installation of pipes (During the jointing process, do not apply bonding and lubricating chemicals to avoid any damages on the threads).
- For the installation of pipes, use suitable materials that will not cause damage on pipes.
- To place the pipes vertically in the well, use centering spring every 8 m. Pay special attention to make sure that particularly the undermost closed pipe has one spring.
- If the pipe is stuck in the well, it should not be piled. It should be taken back and let down again. If the pipe does not go down, the well should be dredged by a driller and then, the pipe should be taken down the well.
- After the pipe contacts the base of the well, take it at least 10 cm above and keep the pipe suspended until graveling is completed so that the pipe stays vertically.

Deep Well Cross-Section

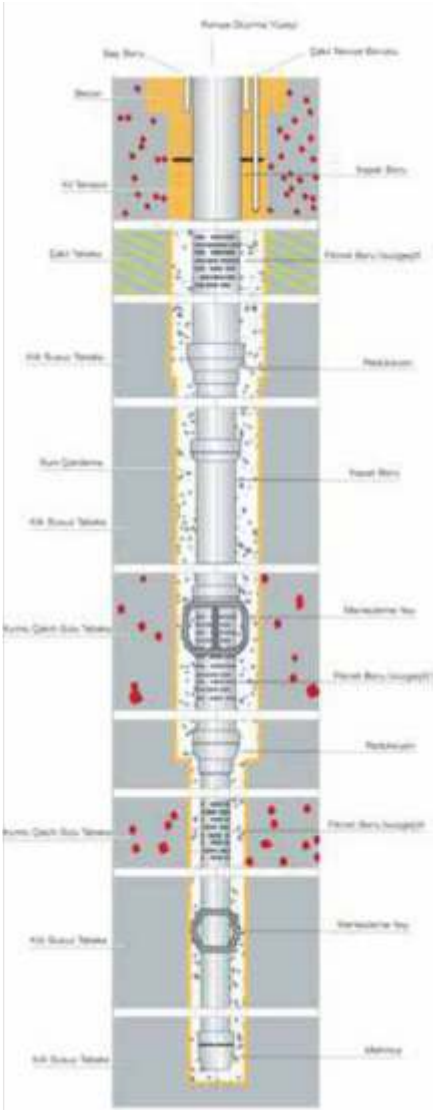

PVC-U
Pressurized Potable Water Piping Systems

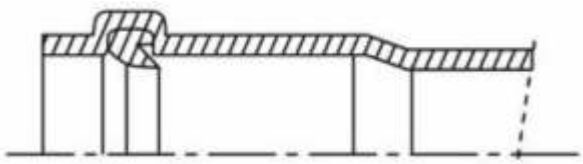

Connection of Push-Fit Pipes with Socket:

- Gasket is used for the jointing of Push-Fit PVC-U Pressurized potable Water Pipes.
- While placing the gasket, the groove of socket should be properly cleaned and attention should be paid to the direction of gasket.
- Solution is applied to the end of the pipe as a lubricating material. Pipe end is pushed into the socket in a way that will not slide the gasket. You should push up to the end of the push-fit distance inside the two pipes at the jointing point.
- Avoid extreme pressure and deflection during the installation of pipes.

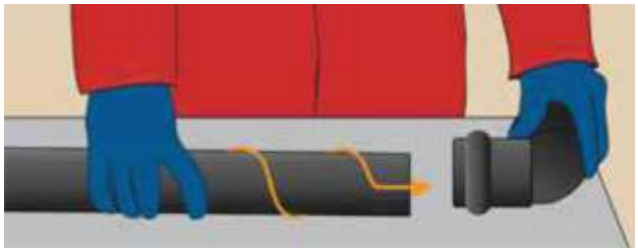

Installation

Connection of Solvent Cement Pipes with Socket:

- First of all, remove all dusts, oils, stains and burrs by using cleaning liquid in the points that will be adhered to each other.
- Adhesion area is marked by the length of socket.
- Grind the adhesion areas on the both parts appropriately. After grinding, wipe and dry the adhesion areas again by using cleaning liquid.
- Apply the adhesive longitudinally on the adhesion points of the both parts by using a clean brush.
- After applying the adhesive appropriately, do not wait and immediately push the parts into each other without rotating them.
- Remove the adhesive residues that come out after pushing the parts into each other.

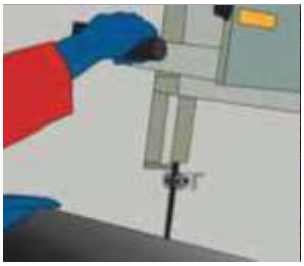
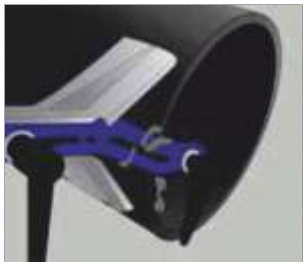

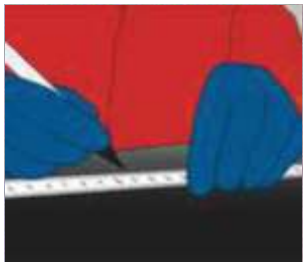

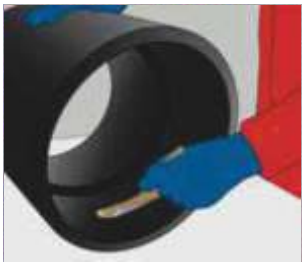

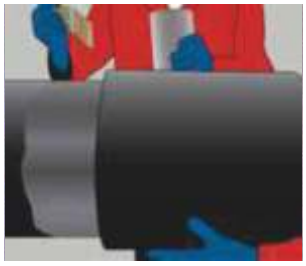

PVC-U Drainage Piping Systems

- Pipes should be protected against sunlight during storage as they do not contain UV additives.
- Pipes taken to the installation site in the form of coils are spread on the soil area excavated depending upon the condition of soil and ground.
- Cover the pipes with appropriate soil embankment in a way that does not close the holes on the pipes.
- Does not require trained personnel and troublesome workmanship as it is very easy to install.

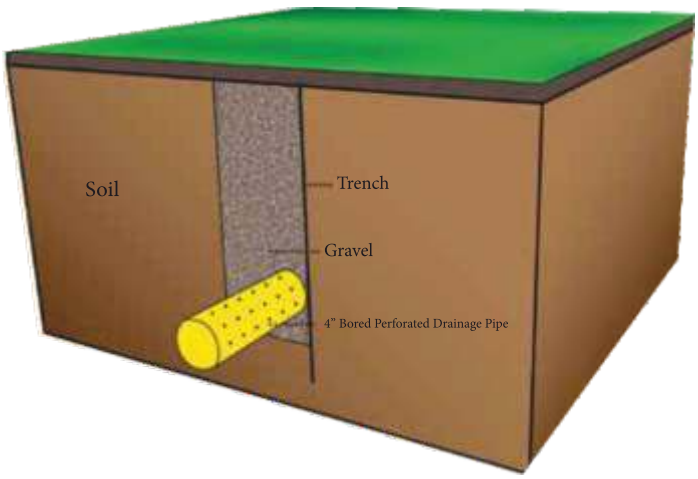

PACKAGING, STORAGE AND TRANSPORTATION

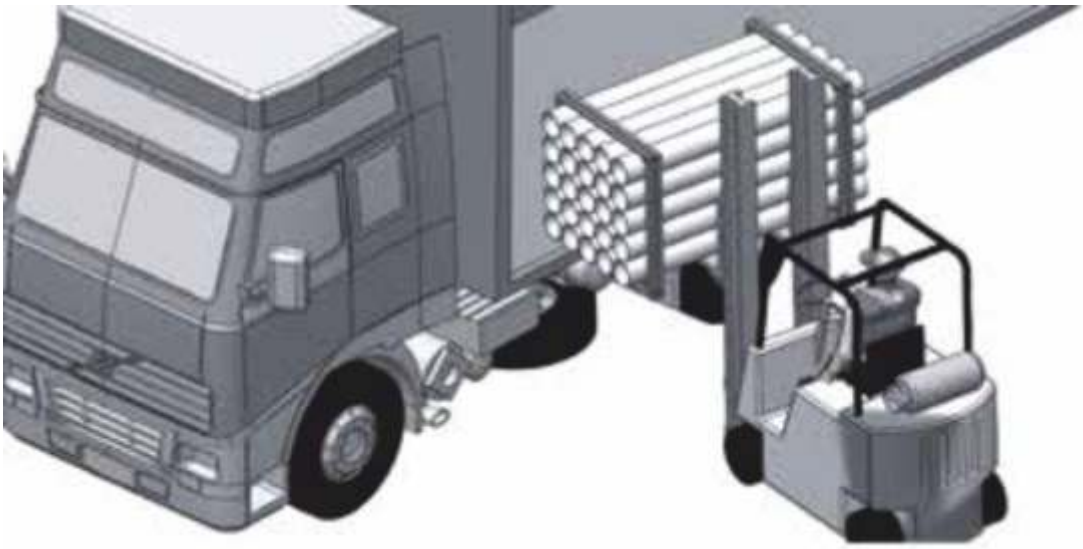

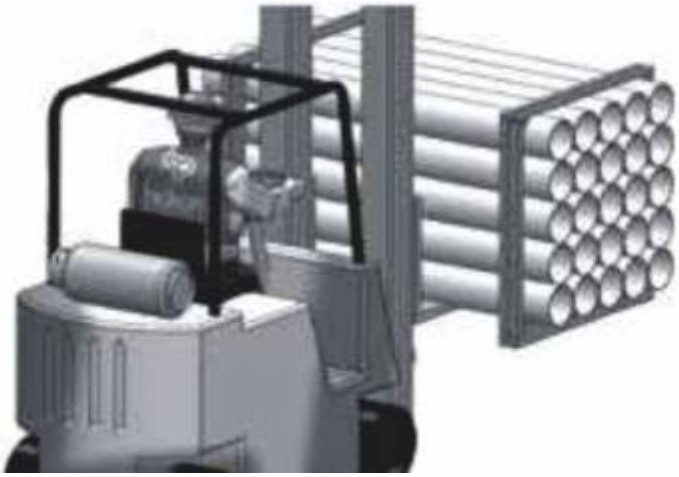

PACKAGING, STORAGE AND TRANSPORTATION

Packaging

GF Hakan Plastik pipes and fittings are packed as ready for transport in a customer-friendly way. Packing ensures safety, efficient storage and easy transport.

Waste water pipes are shipped on wooden frames or pallets according to the demands of customers.

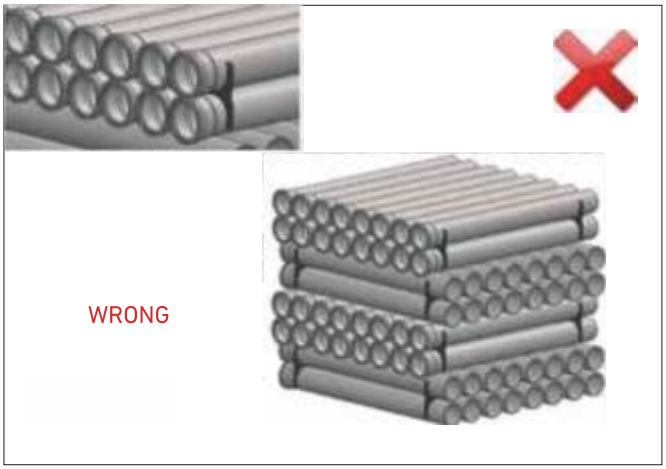

Pipes and fittings with socket are placed in a way that they will not stay on top of each other.

Short parts with the length of 150, 250 and 500 mm are packed in carton boxes like connection parts.

Pipes are packed by plastic clamps to hold them together. Stretch film is applied to protect pipes from pipes dust and stains.

All product ranges are identified in the Warehouse Management System (WMS) by barcode label. Barcode system ensures management of products and prevents complexity and errors during storage and loading.

Storage

Method of storage should not cause any outflow and should not damage the pipes. As long as they are stored properly, no permanent deformations or damages will occur on the pipes and fittings. Pipes should not be stacked above 1,5 m. Pipes should be safe against sliding.

Pipes and fittings packed in carton boxes should be protected against moisture.
Carton boxes should be sealed and stored in a dry area.

Pipes packed in the factory might be stacked on wooden frames. Appropriate materials such as pallet etc. should be used to prevent any damage on the socket parts of the pipes stored for a long time. This also makes it easier to lift the pipes by from the flor.

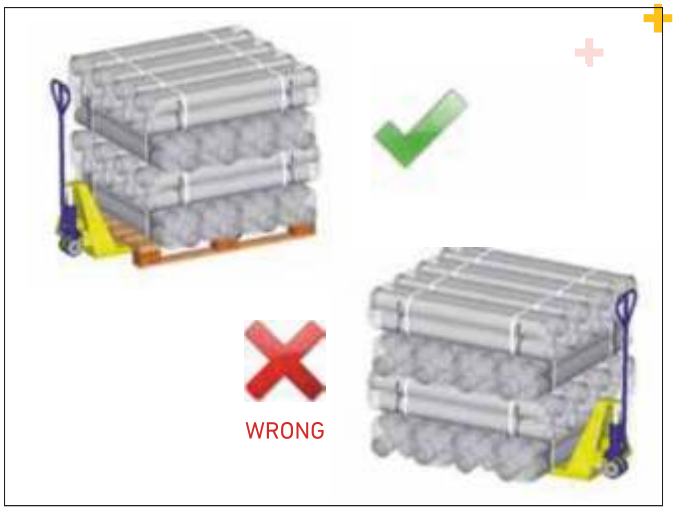

Products that are not resistant to UV should not be stored outdoors and should be protected against sunlight.

Transportation

Pipes should be carefully transported to prevent any damages. Avoid sudden and hard pressures on pipes and fittings that might cause freezing in cold weather conditions. Ensure that pipes are not slided and dropped on the floor. Loading and unloading and packing of pipes in a block should be carried out by means of forklifts having flat threads and extensions.

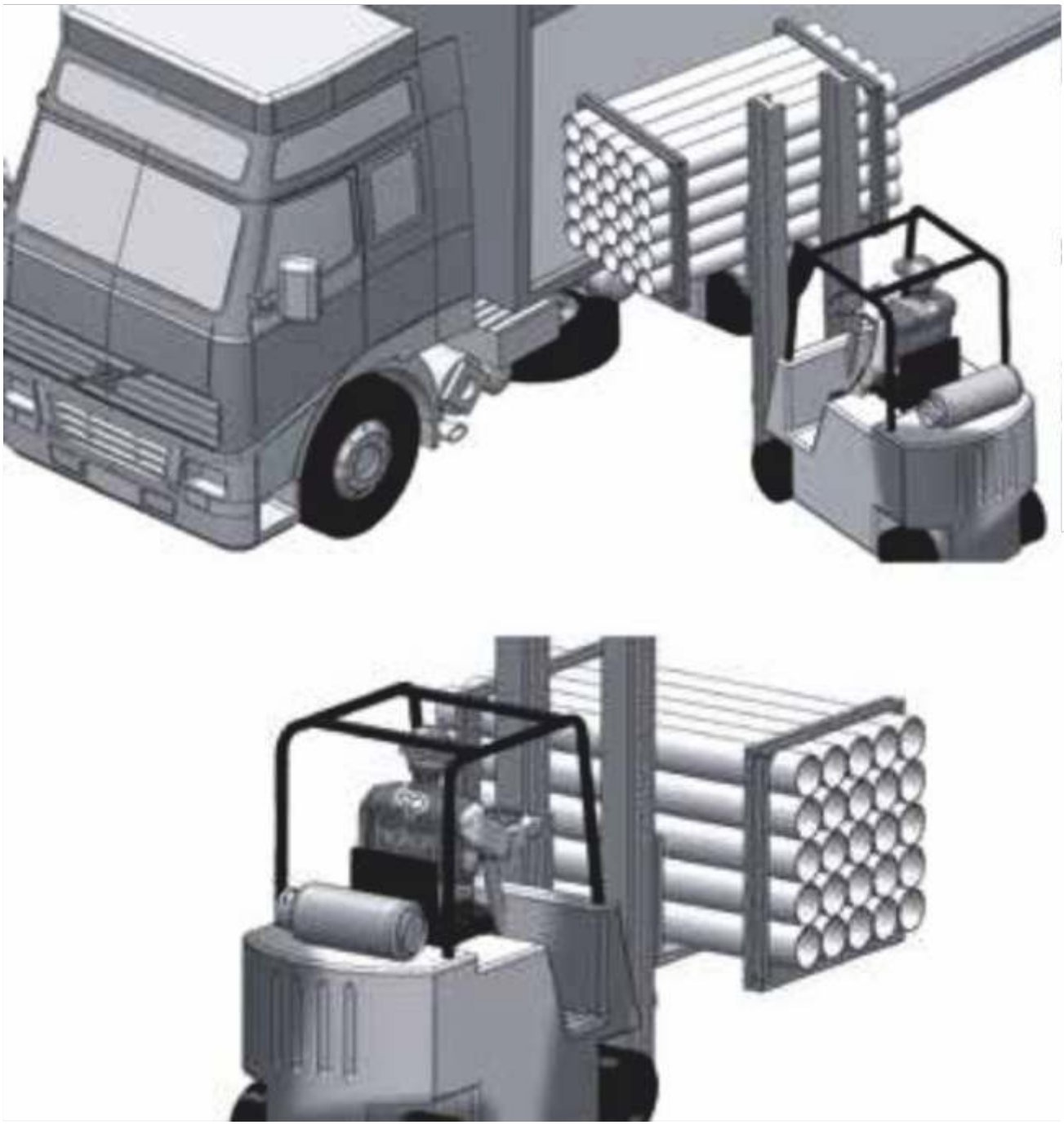

Temperature, Pressure and Service Life Tables

According to EN 15874 - 75 Standard:

Application Class (Class) 1: Hot Water Distribution 60°C	
Operating Temperature	49 years at 60°C
Maximum Operating Temperature	1 year at 80°C
Degradation Temperature	100 hours at 95°C
Maximum Operating Pressure	10 bars
Application Class (Class) 2: Hot Water Distribution 70°C	
Operating Temperature	49 years at 70°C
Maximum Operating Temperature	1 year at 80°C
Degradation Temperature	100 hours at 95°C
Maximum Operating Pressure	10 bars
Application Class (Class) 4: Underfloor Heating and Radiators at Low Temperatures	
Operating Temperature	20°C for 2,5 years
	40°C for the subsequent 20 years
	60°C for the subsequent 20 years
Maximum Operating Temperature	2,5 years at 70°C
Degradation Temperature	100 hours at 100°C
Maximum Operating Pressure	10 bars
Application Class (Class) 5: Radiators at High Temperatures	
Operating Temperature	20°C for 14 years,
	60°C for the subsequent 25 years
	80°C for the subsequent 10 years
Maximum Operating Temperature	1 year at 90°C
Degradation Temperature	100 hours at 100°C
Maximum Operating Pressure	10 bars

Standard PP-R Pipes:
SDR 11/S5.0 (PN10) class 1/6 bar class 2/4 bar
SDR 7.4/S3.2 (PN16) class 1/8 bar class 2/6 bar class 4/10 bar class 5/6 bar
SDR 6/S2.5 (PN20) class 1/10 bar class 2/8 bar class 4/10 bar class 5/6 bar

Glass Fiber Reinforced PP-R Pipes:
SDR 11/S5.0 (PN10) class 1/6 bar class 2/4 bar
SDR 7.4/S3.2 (PN20) class 1/8 bar class 2/6 bar class 4/10 bar class 5/6 bar
SDR 6/S2.5 (PN25) class 1/10 bar class 2/8 bar class 4/10 bar class 5/6 bar

Aluplus Stable Pipes:
SDR6/S2.5 (PN20) class 1/6 bar

Stable Pipes:
SDR6/S2.5 (PN25) class 1/10 bar class 2/8 bar class 4/10 bar class 5/6 bar

PE-RT, PE-XB Pipes:
Class 1-2-4/10 bar class 5/8bar

Glass Reinfoced PP-RCT Pipes:
SDR7,4 class 1/10 bar class 2/10 bar class 4/10 bar class 5/8 bar
SDR9 class 1/8 bar class 2/8 bar class 4/8 bar class 5/6 bar

According to DIN 8077 Standard:

Maximum Operating Pressures according to DIN 8077 with safety factor of 1,5						
Operating Temperature(°C)	Service Life (year)	PP-R			PP-RCT	
		SDR 11 (S5)	SDR 7.4 (S3.2)	SDR 6 (S2.5)	SDR9 (S4)	SDR7.4 (S3.2)
10 °C*	1	17,6	27,8	35	24	30,2
	5	16,7	26,3	33,2	23,2	29,3
	10	16,1	25,6	32,1	22,9	28,9
	25	15,6	24,8	31,1	22,5	28,4
	50	15,2	24,1	30,3	22,2	28
20 °C*	1	15	23,8	30	20,9	26,3
	5	14,1	22,3	28,2	20,2	25,4
	10	13,7	21,8	27,3	19,9	25,1
	25	13,3	21	26,5	19,6	24,6
	50	12,9	20,4	25,8	19,3	24,3
30 °C	1	12,8	20,2	25,5	18,1	22,7
	5	12	18,9	23,9	17,4	22
	10	11,6	18,4	23,1	17,2	21,7
	25	11,2	17,8	22,3	16,9	21,2
	50	10,9	17,3	21,8	16,6	20,9
40 °C	1	10,8	17,2	21,5	15,5	19,6
	5	10,1	16	20,2	15	18,9
	10	9,8	15,6	19,7	14,7	18,6
	25	9,4	15	18,8	14,4	18,2
	50	9,2	14,5	18,3	14,2	17,9
50 °C	1	9,2	14,5	18,3	13,3	16,7
	5	8,5	13,5	17	12,8	16,1
	10	8,3	13,1	16,4	12,6	15,8
	25	8	12,6	15,9	12,3	15,5
	50	7,8	12,3	15,4	12,1	15,2
60 °C	1	7,8	12,3	15,4	11,2	14,2
	5	7,2	11,3	14,3	10,8	13,6
	10	6,9	11	13,8	10,6	13,4
	25	6,7	10,6	13,3	10,4	13,1
	50	6,4	10,3	12,8	10,2	12,8
70 °C	1	6,5	10,3	13	9,4	11,9
	5	6	9,5	11,9	9,1	11,4
	10	5,8	9,3	11,7	8,9	11,2
	25	5,1	8	10,1	8,7	10,9
	50	4,3	6,8	8,5	8,5	10,7
80 °C	1	5,4	8,6	10,9	7,9	9,9
	5	4,8	7,6	9,6	7,5	9,5
	10	4	6,4	8	7,4	9,3
	25	3,2	5,2	6,3	7,2	9,1
95 °C	1	3,8	6,1	7,7	5,9	7,4
	5	2,5	4,1	5,1	5,6	7,1
	10	2,2	3,4	4,3	5,5	6,9

* Cold water applications.

Chemical Resistance Tables

++ Resistant
+ Limited Resistance
O Contact GF Hakan Plastik
- Not Resistant

2-Chloroethanol	Fluid Temperatures			
	20 °C	40 °C	60 °C	80 °C
PVC-U	-			
PE	++	+	O	
PP	++	+	O	-
Acetaldehyde	Fluid Temperatures			
	20 °C	40 °C	60 °C	80 °C
PVC-U	-			
PE	++	O	-	
PP	O	-		
Acetaldehyde, 0-40% aqueous solution	Fluid Temperatures			
	20 °C	40 °C	60 °C	80 °C
PVC-U	-			
PE	++	O	-	
PP	++	O	O	-
Acetic acid, > 80 % aqueous solution	Fluid Temperatures			
	20 °C	40 °C	60 °C	80 °C
PVC-U	O	O	-	
PE	+	O	-	
PP	O	O	-	
Acetic acid, >10-50 % aqueous solution	Fluid Temperatures			
	20 °C	40 °C	60 °C	80 °C
PVC-U	+	+	+	-
PE	+	+	O	-
PP	+	+	O	O
Acetic acid, >50-60 % aqueous solution	Fluid Temperatures			
	20 °C	40 °C	60 °C	80 °C
PVC-U	+	O	O	-
PE	+	+	O	-
PP	+	+	O	O
Acetic acid, >60-80 % aqueous solution	Fluid Temperatures			
	20 °C	40 °C	60 °C	80 °C
PVC-U	+	O	O	-
PE	+	+	O	-
PP	+	+	O	O
Acetic acid, 0-10 % aqueous solution	Fluid Temperatures			
	20 °C	40 °C	60 °C	80 °C
PVC-U	+	+	+	-
PE	+	+	O	-
PP	+	+	O	O
Acetic acid anhydride	Fluid Temperatures			
	20 °C	40 °C	60 °C	80 °C
PVC-U	-			
PE	++	O	-	
PP	++	O	-	
Acetone	Fluid Temperatures			
	20 °C	40 °C	60 °C	80 °C
PVC-U	-			
PE	++	++	O	-
PP	++	++	++	O
Acetone, up to 10 % aqueous solution	Fluid Temperatures			
	20 °C	40 °C	60 °C	80 °C
PVC-U	-			
PE	++	++	++	-
PP	++	++	++	O
Acetonitrile	Fluid Temperatures			
	20 °C	40 °C	60 °C	80 °C
PVC-U	-			
PE	O	-		
PP	O	-		
Acetophenone	Fluid Temperatures			
	20 °C	40 °C	60 °C	80 °C
PVC-U	-			
PE	O	-		
PP	O	-		
Acrylic acid ethylester	Fluid Temperatures			
	20 °C	40 °C	60 °C	80 °C
PVC-U	-			
PE	O	-		
PP	-			
Acrylic acid methylester	Fluid Temperatures			
	20 °C	40 °C	60 °C	80 °C
PVC-U	-			
PE	O	-		
PP	O	-		
Acrylonitrile	Fluid Temperatures			
	20 °C	40 °C	60 °C	80 °C
PVC-U	-			
PE	++	++	++	-
PP	++	O	O	-
Adipic acid, aqueous, saturated solution	Fluid Temperatures			
	20 °C	40 °C	60 °C	80 °C
PVC-U	++	++	-	
PE	++	++	++	-
PP	++	++	++	++
Allyl alcohol, 96% solution	Fluid Temperatures			
	20 °C	40 °C	60 °C	80 °C
PVC-U	O	-		
PE	++	++	O	-
PP	O	O	-	
Aluminium salts, aqueous, saturated solutions	Fluid Temperatures			
	20 °C	40 °C	60 °C	80 °C
PVC-U	++	++	++	-
PE	++	++	++	-
PP	++	++	++	++
Ammonia, gaseous, dry / wet	Fluid Temperatures			
	20 °C	40 °C	60 °C	80 °C
PVC-U	++	++	++	-
PE	++	++	++	-
PP	++	++	++	O
Ammonium Acetate, aqueous solutions	Fluid Temperatures			
	20 °C	40 °C	60 °C	80 °C
PVC-U	++	++	++	-
PE	++	++	++	-
PP	++	++	++	++
Ammonium hydroxide, aqueous	Fluid Temperatures			
	20 °C	40 °C	60 °C	80 °C
PVC-U	++	++	++	-
PE	++	++	++	-
PP	++	++	++	O
Ammonium salts, various concentra-tions, aqueous solutions	Fluid Temperatures			
	20 °C	40 °C	60 °C	80 °C
PVC-U	++	++	++	-
PE	++	++	++	-
PP	++	++	++	++
Amyl acetate	Fluid Temperatures			
	20 °C	40 °C	60 °C	80 °C
PVC-U	-			
PE	++	O	-	
PP	O	-		
Amyl alcohol	Fluid Temperatures			
	20 °C	40 °C	60 °C	80 °C
PVC-U	++	++	O	-
PE	++	++	++	-
PP	++	++	++	O
Aniline	Fluid Temperatures			
	20 °C	40 °C	60 °C	80 °C
PVC-U	-			
PE	++	O	O	-
PP	++	++	O	-
Antimony trichloride, 0-80 % aqueous solutions	Fluid Temperatures			
	20 °C	40 °C	60 °C	80 °C
PVC-U	++	++	O	-
PE	++	++	++	-
PP	++	++	++	O

Chemical Resistance

Aqua regia	Fluid Temperatures			
	20 °C	40 °C	60 °C	80 °C
PVC-U	O	-		
PE	-			
PP	-			
Arsenic acid, 80% aqueous solutions	Fluid Temperatures			
	20 °C	40 °C	60 °C	80 °C
PVC-U	++	++	O	-
PE	++	++	++	-
PP	++	++	++	++
Barium salts, aqueous, saturated solutions	Fluid Temperatures			
	20 °C	40 °C	60 °C	80 °C
PVC-U	++	++	++	-
PE	++	++	++	-
PP	++	++	++	++
Beer	Fluid Temperatures			
	20 °C	40 °C	60 °C	80 °C
PVC-U	++	++	++	-
PE	++	++	++	-
PP	++	++	++	++
Benzaldehyde	Fluid Temperatures			
	20 °C	40 °C	60 °C	80 °C
PVC-U	-			
PE	++	O	-	
PP	++	O	-	
Benzene	Fluid Temperatures			
	20 °C	40 °C	60 °C	80 °C
PVC-U	-			
PE	-			
PP	-			
Benzene sulfonic acid	Fluid Temperatures			
	20 °C	40 °C	60 °C	80 °C
PVC-U	++	++	O	-
PE	++	++	O	-
PP	++	++	O	-
Benzoic acid, aqueous solutions	Fluid Temperatures			
	20 °C	40 °C	60 °C	80 °C
PVC-U	++	++	O	-
PE	++	++	++	-
PP	++	++	++	++
Benzyl alcohol	Fluid Temperatures			
	20 °C	40 °C	60 °C	80 °C
PVC-U	O	-		
PE	++	++	O	-
PP	++	++	O	-
Beryllium salts, aqueous solutions	Fluid Temperatures			
	20 °C	40 °C	60 °C	80 °C
PVC-U	++	++	++	-
PE	++	++	++	-
PP	++	++	++	++
Boric acid, aqueous solutions	Fluid Temperatures			
	20 °C	40 °C	60 °C	80 °C
PVC-U	++	++	O	-
PE	++	++	++	-
PP	++	++	++	++
Brine	Fluid Temperatures			
	20 °C	40 °C	60 °C	80 °C
PVC-U	++	++	++	-
PE	++	++	++	-
PP	++	++	++	++
Bromine water, aqueous solution	Fluid Temperatures			
	20 °C	40 °C	60 °C	80 °C
PVC-U	O	O	-	
PE	-			
PP	-			
Bromine, pure, liquid or gaseous, dry and wet	Fluid Temperatures			
	20 °C	40 °C	60 °C	80 °C
PVC-U class 5/6 bar	-			
PE	-			
PP	-			
Butadiene, gaseous	Fluid Temperatures			
	20 °C	40 °C	60 °C	80 °C
PVC-U	++	O	-	
PE	O	-		
PP	O	-		
Butane, gaseous	Fluid Temperatures			
	20 °C	40 °C	60 °C	80 °C
PVC-U	++	++	O	-
PE	++	++	O	-
PP	++	++	O	-
Butanediol-1,4,	Fluid Temperatures			
	20 °C	40 °C	60 °C	80 °C
PVC-U	O	-		
PE	++	++	++	-
PP	++	++	++	O
Butanediol-1,4, technically pure	Fluid Temperatures			
	20 °C	40 °C	60 °C	80 °C
PVC-U	++	++	O	
PE	++	++	O	
PP	++	++	O	
Butanol	Fluid Temperatures			
	20 °C	40 °C	60 °C	80 °C
PVC-U	++	++	O	-
PE	++	++	O	-
PP	++	++	O	-
Butyl acetate	Fluid Temperatures			
	20 °C	40 °C	60 °C	80 °C
PVC-U	-			
PE	+	O	-	
PP	O	-		
Butyl phenol, p-tertiary	Fluid Temperatures			
	20 °C	40 °C	60 °C	80 °C
PVC-U	O	-		
PE	O	-		
PP	O	-		
Cadmium salts, aqueous solutions	Fluid Temperatures			
	20 °C	40 °C	60 °C	80 °C
PVC-U	++	++	++	-
PE	++	++	++	-
PP	++	++	++	O
Caesium salts, aqueous solutions	Fluid Temperatures			
	20 °C	40 °C	60 °C	80 °C
PVC-U	++	++	++	-
PE	++	++	++	-
PP	++	++	++	++
Calcium hydroxide, aqueous solution	Fluid Temperatures			
	20 °C	40 °C	60 °C	80 °C
PVC-U	++	++	++	-
PE	++	++	++	-
PP	++	++	++	++
Calcium salts, aqueous solutions	Fluid Temperatures			
	20 °C	40 °C	60 °C	80 °C
PVC-U	++	++	++	-
PE	++	++	++	-
PP	++	++	++	++
Carbon dioxide, gaseous, anhydrous	Fluid Temperatures			
	20 °C	40 °C	60 °C	80 °C
PVC-U	++	++	++	-
PE	++	++	++	-
PP	++	++	++	++
Carbon tetrachloride	Fluid Temperatures			
	20 °C	40 °C	60 °C	80 °C
PVC-U	-			
PE	-			
PP	-			

Chemical Resistance

Carbonic acid, CO2 in H2O	Fluid Temperatures			
	20 °C	40 °C	60 °C	80 °C
PVC-U	++	++	0	-
PE	++	++	++	-
PP	++	++	++	++
Chloric acid, >10-20% aqueous solution	Fluid Temperatures			
	20 °C	40 °C	60 °C	80 °C
PVC-U	++	0	-	
PE	0	-		
PP	0	-		
Chloric acid, 0-10 % aqueous solution	Fluid Temperatures			
	20 °C	40 °C	60 °C	80 °C
PVC-U	++	0	-	
PE	0	-		
PP	0	-		
Chlorine, gaseous, dry, pure	Fluid Temperatures			
	20 °C	40 °C	60 °C	80 °C
PVC-U	0	0	-	
PE	-			
PP	-			
Chlorine, gaseous, wet	Fluid Temperatures			
	20 °C	40 °C	60 °C	80 °C
PVC-U	0	0	-	
PE	-			
PP	-			
Chlorine water, <= 2 ppm Chlorine	Fluid Temperatures			
	20 °C	40 °C	60 °C	80 °C
PVC-U	++	++	++	-
PE	++	++	0	-
PP	++	++	++	0
Chlorine water, saturated solution	Fluid Temperatures			
	20 °C	40 °C	60 °C	80 °C
PVC-U	++	++	0	-
PE	-			
PP	-			
Chloroacetic acid, 100 %	Fluid Temperatures			
	20 °C	40 °C	60 °C	80 °C
PVC-U	0	0	-	
PE	++	++	0	-
PP	++	++	0	-
Chloroacetic acid, 50 % aqueous solution	Fluid Temperatures			
	20 °C	40 °C	60 °C	80 °C
PVC-U	++	0	0	-
PE	++	++	0	-
PP	++	++	++	0
Chlorobenzene	Fluid Temperatures			
	20 °C	40 °C	60 °C	80 °C
PVC-U	-			
PE	0	-		
PP	0	-		
Chlorosulfonic acid	Fluid Temperatures			
	20 °C	40 °C	60 °C	80 °C
PVC-U	0	-		
PE	-			
PP	-			
Chromic acid, <10 % aqueous solution	Fluid Temperatures			
	20 °C	40 °C	60 °C	80 °C
PVC-U	+	+	-	
PE	-			
PP	-			
Chromic acid, > 30 % aqueous solution	Fluid Temperatures			
	20 °C	40 °C	60 °C	80 °C
PVC-U	0	-		
PE	-			
PP	-			

Chromic Acid, >=10-30 %, aqueous solutions	Fluid Temperatures			
	20 °C	40 °C	60 °C	80 °C
PVC-U	+	+	-	
PE	-			
PP	-			
Chromium (II) -salts, aqueous, saturated solutions	Fluid Temperatures			
	20 °C	40 °C	60 °C	80 °C
PVC-U	++	++	++	-
PE	++	++	0	-
PP	++	++	0	-
Citric acid, aqueous solutions	Fluid Temperatures			
	20 °C	40 °C	60 °C	80 °C
PVC-U	++	++	++	-
PE	++	++	++	-
PP	++	++	++	++
Compressed air, containing oil	Fluid Temperatures			
	20 °C	40 °C	60 °C	80 °C
PVC-U	-			
PE	0	0	0	-
PP	0	0	0	-
Copper I/II salts, aqueous solutions	Fluid Temperatures			
	20 °C	40 °C	60 °C	80 °C
PVC-U	++	++	++	-
PE	++	++	0	-
PP	++	++	++	0
Crotonaldehyde	Fluid Temperatures			
	20 °C	40 °C	60 °C	80 °C
PVC-U	-			
PE	++	0	0	-
PP	++	0	-	-
Cyclohexane	Fluid Temperatures			
	20 °C	40 °C	60 °C	80 °C
PVC-U	++	0	-	
PE	++	0	-	
PP	++	0	-	
Cyclohexanol	Fluid Temperatures			
	20 °C	40 °C	60 °C	80 °C
PVC-U	++	++	0	-
PE	++	++	0	-
PP	++	++	0	-
Cyclohexanone	Fluid Temperatures			
	20 °C	40 °C	60 °C	80 °C
PVC-U	-			
PE	++	0	-	
PP	0	0	-	
Dextrine, aqueous solutions	Fluid Temperatures			
	20 °C	40 °C	60 °C	80 °C
PVC-U	++	++	++	-
PE	++	++	++	-
PP	++	++	++	0
Dibrombenzene	Fluid Temperatures			
	20 °C	40 °C	60 °C	80 °C
PVC-U	-			
PE	-			
PP	-			
Dibutyl ether	Fluid Temperatures			
	20 °C	40 °C	60 °C	80 °C
PVC-U	-			
PE	0	0	-	
PP	0	0	-	
Dibutyl phthalate	Fluid Temperatures			
	20 °C	40 °C	60 °C	80 °C
PVC-U	++	++	0	-
PE	++	++	0	-
PP	++	0	-	
Dichloroacetic acid	Fluid Temperatures			
	20 °C	40 °C	60 °C	80 °C

Chemical Resistance

PVC-U	++	O	-	
PE	O	-		
PP	O	-		
Dichloroacetic acid, <= 50 % aqueous solution	Fluid Temperatures			
	20 °C	40 °C	60 °C	80 °C
PVC-U	++	++	O	-
PE	++	++	O	-
PP	++	++	O	-
Dichloroacetic acid methyl ester	Fluid Temperatures			
	20 °C	40 °C	60 °C	80 °C
PVC-U	-			
PE	++	++	O	-
PP	++	++	++	O
Dichlorobenzene	Fluid Temperatures			
	20 °C	40 °C	60 °C	80 °C
PVC-U	-			
PE	O	-		
PP	O	-		
Dichlorodifluoromethane, gaseous	Fluid Temperatures			
	20 °C	40 °C	60 °C	80 °C
PVC-U	-			
PE	O	-		
PP	O	-		
Dichloroethylene	Fluid Temperatures			
	20 °C	40 °C	60 °C	80 °C
PVC-U	-			
PE	-			
PP	-			
Diesel oil	Fluid Temperatures			
	20 °C	40 °C	60 °C	80 °C
PVC-U	O	O	-	
PE	O	O	-	
PP	O	-		
Diethanolamine, aqueous solution	Fluid Temperatures			
	20 °C	40 °C	60 °C	80 °C
PVC-U	-			
PE	++	O	-	
PP	++	O	-	
Diethyl ether	Fluid Temperatures			
	20 °C	40 °C	60 °C	80 °C
PVC-U	-			
PE	O	-		
PP	O	-		
Diethylamine	Fluid Temperatures			
	20 °C	40 °C	60 °C	80 °C
PVC-U	-			
PE	++	O	-	
PP	++	O	-	
Diisobutyl ketone	Fluid Temperatures			
	20 °C	40 °C	60 °C	80 °C
PVC-U	-			
PE	++	O	-	
PP	++	O	-	
Diisopropyl ether	Fluid Temperatures			
	20 °C	40 °C	60 °C	80 °C
PVC-U	-			
PE	O	-		
PP	O	-		
Dimethyl formamide	Fluid Temperatures			
	20 °C	40 °C	60 °C	80 °C
PVC-U	-			
PE	++	++	O	-
PP	++	++	++	O
Dimethylamine	Fluid Temperatures			
	20 °C	40 °C	60 °C	80 °C
PVC-U	-			
PE	++	O	-	
PP	++	O	-	

Dioxane	Fluid Temperatures			
	20 °C	40 °C	60 °C	80 °C
PVC-U	-			
PE	++	O	-	
PP	O	-		
Ethanol, <= 50% aqueous solution	Fluid Temperatures			
	20 °C	40 °C	60 °C	80 °C
PVC-U	++	++	O	-
PE	++	++	++	-
PP	++	++	++	++
Ethyl alcohol, 96%	Fluid Temperatures			
	20 °C	40 °C	60 °C	80 °C
PVC-U	++	++	O	-
PE	++	++	++	-
PP	++	++	++	++
Ethanolamine	Fluid Temperatures			
	20 °C	40 °C	60 °C	80 °C
PVC-U	-			
PE	++	O	-	
PP	++	O	-	
Ethyl benzene	Fluid Temperatures			
	20 °C	40 °C	60 °C	80 °C
PVC-U	-			
PE	O	-		
PP	O	-		
Ethylacetate	Fluid Temperatures			
	20 °C	40 °C	60 °C	80 °C
PVC-U	-			
PE	++	O		
PP	++	O		
Ethylchloride, gaseous	Fluid Temperatures			
	20 °C	40 °C	60 °C	80 °C
PVC-U	-			
PE	O	-		
PP	O	-		
Ethylene diamine	Fluid Temperatures			
	20 °C	40 °C	60 °C	80 °C
PVC-U	-			
PE	++	++	++	-
PP	++	++	++	O
Ethylene glycol	Fluid Temperatures			
	20 °C	40 °C	60 °C	80 °C
PVC-U	-			
PE	+	+	O	-
PP	+	+	O	-
Ethylene glycol, <= 50% aqueous solution	Fluid Temperatures			
	20 °C	40 °C	60 °C	80 °C
PVC-U	++	++	O	-
PE	+	+	O	-
PP	+	+	+	O
Ethylenediamine tetraacetic acid, aqueous solution	Fluid Temperatures			
	20 °C	40 °C	60 °C	80 °C
PVC-U	O	-		
PE	+	+	O	-
PP	+	+	O	-
Ferric chloride	Fluid Temperatures			
	20 °C	40 °C	60 °C	80 °C
PVC-U	++	++	++	-
PE	++	++	++	-
PP	++	++	++	++
Fluorosilicic acid, < = 32 % aqueous solutions	Fluid Temperatures			
	20 °C	40 °C	60 °C	80 °C
PVC-U	++	++	++	-
PE	++	++	++	-
PP	++	++	++	O

Chemical Resistance

Formaldehyde, <= 40 % aqueous solution	Fluid Temperatures			
	20 °C	40 °C	60 °C	80 °C
PVC-U	+	+	O	-
PE	+	+	O	-
PP	+	+	O	-
Formamide	Fluid Temperatures			
	20 °C	40 °C	60 °C	80 °C
PVC-U	-			
PE	++	++	++	-
PP	++	++	++	O
Formic acid, > 25-50 % aqueous solution	Fluid Temperatures			
	20 °C	40 °C	60 °C	80 °C
PVC-U	+	+	O	-
PE	+	+	O	-
PP	+	+	O	-
Formic acid, > 60 % aqueous solution	Fluid Temperatures			
	20 °C	40 °C	60 °C	80 °C
PVC-U	O	-		
PE	+	+	O	-
PP	O	-		
Formic acid, >10-25 % aquesous solution	Fluid Temperatures			
	20 °C	40 °C	60 °C	80 °C
PVC-U	+	+	O	-
PE	+	+	O	-
PP	+	+	O	-
Formic acid, >50-60 %, aqueous solution	Fluid Temperatures			
	20 °C	40 °C	60 °C	80 °C
PVC-U	+	+	O	-
PE	+	+	O	-
PP	+	+	O	-
Formic acid, 0-10% aqueous solution	Fluid Temperatures			
	20 °C	40 °C	60 °C	80 °C
PVC-U	+	+	O	-
PE	+	+	O	-
PP	++	+	O	-
Fuel oil, heavy fuel oil	Fluid Temperatures			
	20 °C	40 °C	60 °C	80 °C
PVC-U	-			
PE	O	-		
PP	O	-		
Furfural	Fluid Temperatures			
	20 °C	40 °C	60 °C	80 °C
PVC-U	-			
PE	++	++	O	-
PP	++	O	O	O
Furfuryl alcohol	Fluid Temperatures			
	20 °C	40 °C	60 °C	80 °C
PVC-U	-			
PE	++	++	O	-
PP	++	++	O	-
Gasoline	Fluid Temperatures			
	20 °C	40 °C	60 °C	80 °C
PVC-U	O	-		
PE	O	-		
PP	O	-		
Gelatine, aqueous solution	Fluid Temperatures			
	20 °C	40 °C	60 °C	80 °C
PVC-U	++	++	O	-
PE	++	++	++	-
PP	++	++	++	O
Glucose, aqueous solutions	Fluid Temperatures			
	20 °C	40 °C	60 °C	80 °C
PVC-U	++	++	O	-
PE	++	++	++	-
PP	++	++	++	++

Glycerol, Glycerin	Fluid Temperatures			
	20 °C	40 °C	60 °C	80 °C
PVC-U	++	++	++	-
PE	++	++	++	-
PP	++	++	++	++
Glycin, 10% aqueous solution	Fluid Temperatures			
	20 °C	40 °C	60 °C	80 °C
PVC-U	++	++	O	-
PE	++	++	O	-
PP	++	++	O	-
Glycolic acid, 37% aqueous solution	Fluid Temperatures			
	20 °C	40 °C	60 °C	80 °C
PVC-U	++	++	O	-
PE	+	+	O	-
PP	+	+	O	-
Heptane	Fluid Temperatures			
	20 °C	40 °C	60 °C	80 °C
PVC-U	++	O	-	
PE	++	O	-	
PP	O	-		
Hexane	Fluid Temperatures			
	20 °C	40 °C	60 °C	80 °C
PVC-U	++	O	-	
PE	++	O	-	
PP	O	-		
Hydrazine Hydrate, aqueous solution	Fluid Temperatures			
	20 °C	40 °C	60 °C	80 °C
PVC-U	++	O	-	
PE	++	++	O	-
PP	++	O	-	
Hydrochloric acid, <= 10% aqueous solution	Fluid Temperatures			
	20 °C	40 °C	60 °C	80 °C
PVC-U	++	++	++	-
PE	+	+	+	-
PP	+	+	+	+
Hydrochloric acid, > 10-25 % aqueous solution	Fluid Temperatures			
	20 °C	40 °C	60 °C	80 °C
PVC-U	++	++	++	-
PE	+	+	+	-
PP	+	+	+	+
Hydrochloric acid, > 25-30% aqueous solution	Fluid Temperatures			
	20 °C	40 °C	60 °C	80 °C
PVC-U	++	++	++	-
PE	+	+	+	-
PP	+	+	+	+
Hydrochloric acid, > 30 - 37 % aqueous solution	Fluid Temperatures			
	20 °C	40 °C	60 °C	80 °C
PVC-U	++	++	++	-
PE	+	+	O	-
PP	O	O	O	O
Hydrochloric acid, > 37 %, aqueous solution	Fluid Temperatures			
	20 °C	40 °C	60 °C	80 °C
PVC-U	O	-		
PE	O	-		
PP	O	-		
Hydrocyanic acid	Fluid Temperatures			
	20 °C	40 °C	60 °C	80 °C
PVC-U	++	++	O	-
PE	++	++	++	-
PP	++	++	++	O
Hydrofluoric acid, <= 10 % aqueous solution	Fluid Temperatures			
	20 °C	40 °C	60 °C	80 °C
PVC-U	+	+	O	-
PE	+	+	O	-
PP	+	+	O	O

Chemical Resistance

Hydrofluoric acid, > 40% - 75% aqueous solution	Fluid Temperatures			
	20 °C	40 °C	60 °C	80 °C
PVC-U	-			
PE	+	+	O	-
PP	O	O		
Hydrofluoric acid, > 75 % aqueous solution	Fluid Temperatures			
	20 °C	40 °C	60 °C	80 °C
PVC-U	-			
PE	-			
PP	-			
Hydrofluoric acid, 10% - 40 % aqueous solution	Fluid Temperatures			
	20 °C	40 °C	60 °C	80 °C
PVC-U	O	O	-	
PE	+	+	O	-
PP	+	+	O	O
Hydrogen chloride, gaseous	Fluid Temperatures			
	20 °C	40 °C	60 °C	80 °C
PVC-U	++	++	O	-
PE	++	++	O	-
PP	++	++	O	-
Hydrogen peroxide, < 5 % aqueous solution	Fluid Temperatures			
	20 °C	40 °C	60 °C	80 °C
PVC-U	++	++	-	
PE	+	O	-	
PP	O	-		
Hydrogen peroxide, >= 5 % aqueous solution	Fluid Temperatures			
	20 °C	40 °C	60 °C	80 °C
PVC-U	++	++	-	
PE	O	-		
PP	-			
Hydrogen Sulfide gaseous	Fluid Temperatures			
	20 °C	40 °C	60 °C	80 °C
PVC-U	++	++	O	-
PE	++	++	O	-
PP	++	++	++	O
Hydrogen sulfide, aqueous saturated solution	Fluid Temperatures			
	20 °C	40 °C	60 °C	80 °C
PVC-U	++	++	O	-
PE	++	++	++	-
PP	++	++	++	O
Hydrogen, gas	Fluid Temperatures			
	20 °C	40 °C	60 °C	80 °C
PVC-U	++	++	++	-
PE	++	++	++	-
PP	++	++	++	O
Hydroquinone, cold saturated aqueous solution	Fluid Temperatures			
	20 °C	40 °C	60 °C	80 °C
PVC-U	++	O	-	
PE	++	O	-	
PP	++	O	-	
Iron salts, aqueous, saturated solutions	Fluid Temperatures			
	20 °C	40 °C	60 °C	80 °C
PVC-U	++	++	++	-
PE	++	++	++	-
PP	++	++	++	++
Isobutylacetate	Fluid Temperatures			
	20 °C	40 °C	60 °C	80 °C
PVC-U	-			
PE	++	O	-	
PP	++	O	-	
Isooctane	Fluid Temperatures			
	20 °C	40 °C	60 °C	80 °C
PVC-U	++	O	-	
PE	++	O	-	
PP	++	O	-	
Isopropyl alcohol	Fluid Temperatures			
	20 °C	40 °C	60 °C	80 °C
PVC-U	++	O	-	
PE	++	++	O	-
PP	++	++	O	-
Lactic acid, aqueous solution	Fluid Temperatures			
	20 °C	40 °C	60 °C	80 °C
PVC-U	++	O	O	-
PE	+	+	+	-
PP	+	+	+	O
Lead Acetate	Fluid Temperatures			
	20 °C	40 °C	60 °C	80 °C
PVC-U	++	++	++	-
PE	++	++	++	-
PP	++	++	++	O
Linseed oil	Fluid Temperatures			
	20 °C	40 °C	60 °C	80 °C
PVC-U	++	++	O	-
PE	++	++	O	-
PP	++	++	++	O
Lithium salts, aqueous saturated solutions	Fluid Temperatures			
	20 °C	40 °C	60 °C	80 °C
PVC-U	++	++	++	-
PE	++	++	++	-
PP	++	++	++	++
Magnesium salts, aqueous, saturated solutions	Fluid Temperatures			
	20 °C	40 °C	60 °C	80 °C
PVC-U	++	++	++	-
PE	++	++	++	-
PP	++	++	++	++
Maleic acid, cold saturated, aqueous solution	Fluid Temperatures			
	20 °C	40 °C	60 °C	80 °C
PVC-U	++	O		
PE	++	++	O	
PP	++	++	O	
Mercury salts, aqueous, saturated solutions	Fluid Temperatures			
	20 °C	40 °C	60 °C	80 °C
PVC-U	++	++	O	-
PE	++	++	++	-
PP	++	++	++	++
Methane, gaseous	Fluid Temperatures			
	20 °C	40 °C	60 °C	80 °C
PVC-U	++	O		
PE	++	O		
PP	++	O		
Methanol	Fluid Temperatures			
	20 °C	40 °C	60 °C	80 °C
PVC-U	++	++	O	-
PE	++	++	++	-
PP	++	++	++	O
Methyl acetate	Fluid Temperatures			
	20 °C	40 °C	60 °C	80 °C
PVC-U	-			
PE	++	++	O	
PP	++	++	O	
Methyl Amine, 32 % aqueous solution	Fluid Temperatures			
	20 °C	40 °C	60 °C	80 °C
PVC-U	O			
PE	++	O		
PP	++	O		
Methyl bromide, gaseous	Fluid Temperatures			
	20 °C	40 °C	60 °C	80 °C

Chemical Resistance

PVC-U	-			
PE	-			
PP	-			
Methyl ethyl ketone	Fluid Temperatures			
	20 °C	40 °C	60 °C	80 °C
PVC-U	-			
PE	++	O		
PP	++	O		
Methyl isobutyl ketone	Fluid Temperatures			
	20 °C	40 °C	60 °C	80 °C
PVC-U	-			
PE	++	O		
PP	++	O		
Methyl acetate	Fluid Temperatures			
	20 °C	40 °C	60 °C	80 °C
PVC-U	-			
PE	++	++	O	
PP	++	++	O	
Methyl Amine, 32 % aqueous solution	Fluid Temperatures			
	20 °C	40 °C	60 °C	80 °C
PVC-U	O			
PE	++	O		
PP	++	O		
Methyl bromide, gaseous	Fluid Temperatures			
	20 °C	40 °C	60 °C	80 °C
PVC-U	-			
PE	-			
PP	-			
Methyl ethyl ketone	Fluid Temperatures			
	20 °C	40 °C	60 °C	80 °C
PVC-U	-			
PE	++	O		
PP	++	O		
Methyl isobutyl ketone	Fluid Temperatures			
	20 °C	40 °C	60 °C	80 °C
PVC-U	-			
PE	++	O		
PP	++	O		
Methyl methacrylate	Fluid Temperatures			
	20 °C	40 °C	60 °C	80 °C
PVC-U	-			
PE	++	++	O	
PP	++	++	O	
Milk	Fluid Temperatures			
	20 °C	40 °C	60 °C	80 °C
PVC-U	++	++	++	-
PE	++	++	++	-
PP	++	++	++	++
Mineral oil	Fluid Temperatures			
	20 °C	40 °C	60 °C	80 °C
PVC-U	++	++	O	
PE	++	++	O	
PP	++	++	O	
50% Chromic acid / 15% sulfuric acid / 35% water	Fluid Temperatures			
	20 °C	40 °C	60 °C	80 °C
PVC-U	O	O	-	
PE	-			
PP	-			
Mixed acids: 15% nitric / 15% hydro-fluoric / 18% sulfuric	Fluid Temperatures			
	20 °C	40 °C	60 °C	80 °C
PVC-U	O			
PE	-			
PP	-			
Mixed acids: 30% sulfuric / 60% phosphoric / 10% water	Fluid Temperatures			
	20 °C	40 °C	60 °C	80 °C

PVC-U	++	++	O	-
PE	++	++	O	-
PP	++	++	++	O
Mixed acids: sulfuric / nitric / water, various concentrations	Fluid Temperatures			
	20 °C	40 °C	60 °C	80 °C
PVC-U	O			
PE	O			
PP	O			
N-Methylpyrrolidon	Fluid Temperatures			
	20 °C	40 °C	60 °C	80 °C
PVC-U	-			
PE	++	O		
PP	++	O		
N,N-Dimethylaniline	Fluid Temperatures			
	20 °C	40 °C	60 °C	80 °C
PVC-U	-			
PE	++	O		
PP	O			
Nickel salts, aqueous, saturated solutions	Fluid Temperatures			
	20 °C	40 °C	60 °C	80 °C
PVC-U	++	++	O	-
PE	++	++	++	-
PP	++	++	++	++
Nitrating acid	Fluid Temperatures			
	20 °C	40 °C	60 °C	80 °C
PVC-U	O	O	-	
PE	-			
PP	-			
Nitric acid, > 30 - 55 % aqueous solution	Fluid Temperatures			
	20 °C	40 °C	60 °C	80 °C
PVC-U	+	+	-	
PE	-			
PP	-			
Nitric acid, > 6 - 20 % aqueous solution	Fluid Temperatures			
	20 °C	40 °C	60 °C	80 °C
PVC-U	++	++	++	-
PE	O	-		
PP	O	O		
Nitric acid, >20 - 30 % aqueous solution	Fluid Temperatures			
	20 °C	40 °C	60 °C	80 °C
PVC-U	++	++	++	-
PE	O	-		
PP	O	O		
Nitric acid, >55 - 65% aqueous solution	Fluid Temperatures			
	20 °C	40 °C	60 °C	80 °C
PVC-U	O	O	-	
PE	-			
PP	-			
Nitric acid, ≤ 6 % aqueous solution	Fluid Temperatures			
	20 °C	40 °C	60 °C	80 °C
PVC-U	++	++	++	-
PE	O	-		
PP	O	O	O	
Nitrobenzene	Fluid Temperatures			
	20 °C	40 °C	60 °C	80 °C
PVC-U	-			
PE	++	O		
PP	++	O		
Nitrogen Gas	Fluid Temperatures			
	20 °C	40 °C	60 °C	80 °C
PVC-U	++	++	++	-
PE	++	++	++	-
PP	++	++	++	++

Chemical Resistance

Nitrotoluene (o-, m-, p-)	Fluid Temperatures			
	20 °C	40 °C	60 °C	80 °C
PVC-U	-			
PE	++	O		
PP	O			
Nitrous acid	Fluid Temperatures			
	20 °C	40 °C	60 °C	80 °C
PVC-U	++	++	O	-
PE	++	O		
PP	++	O		
Nitrous gases (Nitric oxide),	Fluid Temperatures			
	20 °C	40 °C	60 °C	80 °C
PVC-U	++	O		
PE	O			
PP	O			
Oleic acid	Fluid Temperatures			
	20 °C	40 °C	60 °C	80 °C
PVC-U	++	++	O	-
PE	++	O		
PP	++	O		
Oleum, <= 10 % SO3	Fluid Temperatures			
	20 °C	40 °C	60 °C	80 °C
PVC-U	-			
PE	-			
PP	-			
Olive oil	Fluid Temperatures			
	20 °C	40 °C	60 °C	80 °C
PVC-U	++	++	O	-
PE	+	+	O	
PP	+	+	O	
Oxygen, gaseous	Fluid Temperatures			
	20 °C	40 °C	60 °C	80 °C
PVC-U	++	++	++	-
PE	++	++	O	
PP	++	++	O	
Palm oil, palm nut oil	Fluid Temperatures			
	20 °C	40 °C	60 °C	80 °C
PVC-U	++	++	++	-
PE	++	++	++	-
PP	++	O		
Peracetic acid, > 10 %	Fluid Temperatures			
	20 °C	40 °C	60 °C	80 °C
PVC-U	O	O		
PE	O			
PP	O			
Peracetic acid	Fluid Temperatures			
	20 °C	40 °C	60 °C	80 °C
PVC-U	O	O		
PE	O			
PP	O			
Perchloric acid, <= 70 % aqueous solution	Fluid Temperatures			
	20 °C	40 °C	60 °C	80 °C
PVC-U	O			
PE	O			
PP	O			
Peroxo monosulfuric acid, 0-10 % aqueous solution	Fluid Temperatures			
	20 °C	40 °C	60 °C	80 °C
PVC-U	O			
PE	-			
PP	-			
Phenol, <= 10 % aqueous solution	Fluid Temperatures			
	20 °C	40 °C	60 °C	80 °C
PVC-U	O			
PE	++	++	O	
PP	++	++	O	
Phosphoric acid, <= 60 % aqueous solution	Fluid Temperatures			

	20 °C	40 °C	60 °C	80 °C
PVC-U	++	++	++	-
PE	+	+	O	
PP	+	+	+	O
Phosphoric acid, >60-85 % aqueous solution	Fluid Temperatures			
	20 °C	40 °C	60 °C	80 °C
PVC-U	+	+	O	-
PE	+	+	O	
PP	+	+	O	
Phosphoric acid, >85-95 % aqueous solution	Fluid Temperatures			
	20 °C	40 °C	60 °C	80 °C
PVC-U	+	+	O	-
PE	+	+	O	
PP	+	+	O	
Phosphorous chlorides: -trichloride -pentachloride -oxichloride	Fluid Temperatures			
	20 °C	40 °C	60 °C	80 °C
PVC-U	-			
PE	O			
PP	O			
Photographic fixer, commercial solutions	Fluid Temperatures			
	20 °C	40 °C	60 °C	80 °C
PVC-U	++	++	O	-
PE	+	+	O	-
PP	+	+	O	
Phthalic acid, aqueous saturated solution	Fluid Temperatures			
	20 °C	40 °C	60 °C	80 °C
PVC-U	++	O		
PE	++	++	++	-
PP	++	++	++	O
Potassium aluminium salts(alum), aqueous, saturated solutions	Fluid Temperatures			
	20 °C	40 °C	60 °C	80 °C
PVC-U	++	++	++	-
PE	++	++	++	-
PP	++	++	++	++
Potassium cyanide, sodium Cyanide, aqueous solutions	Fluid Temperatures			
	20 °C	40 °C	60 °C	80 °C
PVC-U	++	++	++	-
PE	++	++	++	-
PP	++	++	++	++
Potassium formiate, aqueous solutions	Fluid Temperatures			
	20 °C	40 °C	60 °C	80 °C
PVC-U	++	++	O	-
PE	++	++	++	-
PP	++	++	++	++
Potassium hydroxide <= 50 % aqueous solution	Fluid Temperatures			
	20 °C	40 °C	60 °C	80 °C
PVC-U	++	++	++	-
PE	++	++	++	-
PP	+	+	+	+
Potassium hypochlorite, <=16% active Chlorine	Fluid Temperatures			
	20 °C	40 °C	60 °C	80 °C
PVC-U	+	+	-	
PE	O			
PP	O			
Potassium Permanganate, aqueous solution	Fluid Temperatures			
	20 °C	40 °C	60 °C	80 °C
PVC-U	+	+	O	-
PE	O	O	-	
PP	O	O	-	
Potassium persulphate, aqueous solution	Fluid Temperatures			
	20 °C	40 °C	60 °C	80 °C

Chemical Resistance

PVC-U	++	++	O	-
PE	++	++	++	-
PP	++	++	++	O
Propane, gaseous	Fluid Temperatures			
	20 °C	40 °C	60 °C	80 °C
PVC-U	++	O		
PE	++	++	O	
PP	++	O		
Propionic acid	Fluid Temperatures			
	20 °C	40 °C	60 °C	80 °C
PVC-U	++	O		
PE	++	O		
PP	++	O		
Propionic acid, 50% aqueous solution	Fluid Temperatures			
	20 °C	40 °C	60 °C	80 °C
PVC-U	++	++	O	-
PE	++	++	++	-
PP	++	++	++	O
Propylene glycol	Fluid Temperatures			
	20 °C	40 °C	60 °C	80 °C
PVC-U	-			
PE	+	+	O	-
PP	+	+	+	O
Propylene glycol <= 50% aqueous solution	Fluid Temperatures			
	20 °C	40 °C	60 °C	80 °C
PVC-U	++	++	O	-
PE	+	+	O	-
PP	+	+	+	O
Pyridine	Fluid Temperatures			
	20 °C	40 °C	60 °C	80 °C
PVC-U	-			
PE	++	O		
PP	O			
Salicylaldehyde	Fluid Temperatures			
	20 °C	40 °C	60 °C	80 °C
PVC-U	O	-		
PE	O			
PP	O			
Silicic acids	Fluid Temperatures			
	20 °C	40 °C	60 °C	80 °C
PVC-U	++	++	++	-
PE	++	++	++	-
PP	++	++	++	++
Silicone oils	Fluid Temperatures			
	20 °C	40 °C	60 °C	80 °C
PVC-U	++	O		
PE	++	++	++	-
PP	++	++	++	++
Silver salts, aqueous saturated solutions	Fluid Temperatures			
	20 °C	40 °C	60 °C	80 °C
PVC-U	++	++	++	-
PE	++	++	++	-
PP	++	++	++	++
Sodium borate, aqueous solution	Fluid Temperatures			
	20 °C	40 °C	60 °C	80 °C
PVC-U	++	++	O	
PE	++	++	++	-
PP	++	++	++	++
Sodium Carbonate, aqueous solutions	Fluid Temperatures			
	20 °C	40 °C	60 °C	80 °C
PVC-U	++	++	++	-
PE	++	++	++	-
PP	++	++	++	++
Sodium Chloride, aqueous saturated solution	Fluid Temperatures			
	20 °C	40 °C	60 °C	80 °C
PVC-U	++	++	++	-
PE	++	++	++	-
PP	++	++	++	++
Sodium chlorite, aqueous solution	Fluid Temperatures			
	20 °C	40 °C	60 °C	80 °C
PVC-U	++	++	++	-
PE	+	+	O	
PP	+	+	O	
Sodium Chromate, diluted aqueous solution	Fluid Temperatures			
	20 °C	40 °C	60 °C	80 °C
PVC-U	++	++	O	
PE	O			
PP	O			
Sodium hydrogen sulfite,	Fluid Temperatures			
	20 °C	40 °C	60 °C	80 °C
PVC-U	++	++	++	-
PE	++	++	++	-
PP	++	++	++	++
Sodium hydroxide, <=10% aqueous solution	Fluid Temperatures			
	20 °C	40 °C	60 °C	80 °C
PVC-U	++	++	+	-
PE	++	++	++	-
PP	+	+	+	O
Sodium hydroxide, > 50 %	Fluid Temperatures			
	20 °C	40 °C	60 °C	80 °C
PVC-U	O	O	-	
PE	O	O	O	-
PP	O	O	O	O
Sodium hydroxide, >10-50 % aqueous solution	Fluid Temperatures			
	20 °C	40 °C	60 °C	80 °C
PVC-U	++	++	O	-
PE	++	++	++	-
PP	+	+	O	O
Sodium Hypochlorite from elec-trochlorination plants	Fluid Temperatures			
	20 °C	40 °C	60 °C	80 °C
PVC-U	O			
PE	O			
PP	O			
Sodium hypochlorite, < 0.5 ppm active chlorine	Fluid Temperatures			
	20 °C	40 °C	60 °C	80 °C
PVC-U	++	++	O	-
PE	++	++	O	-
PP	++	++	O	-
Sodium hypochlorite, <= 6 % active chlorine	Fluid Temperatures			
	20 °C	40 °C	60 °C	80 °C
PVC-U	+	+	O	-
PE	-			
PP	-			
Sodium hypochlorite, > 6 % active chlorine	Fluid Temperatures			
	20 °C	40 °C	60 °C	80 °C
PVC-U	+	+	-	
PE	-			
PP	-			
Sodium hypochlorite, 0.5 - 2 ppm active chlorine	Fluid Temperatures			
	20 °C	40 °C	60 °C	80 °C
PVC-U	++	++	O	-
PE	++	++	-	
PP	++	++	-	
Sodium persulphate, aqueous, cold saturated solution	Fluid Temperatures			
	20 °C	40 °C	60 °C	80 °C
PVC-U	++	++	O	-
PE	++	++	++	-
PP	++	++	++	O

Chemical Resistance

Sodium salts, aqueous, saturated solutions	Fluid Temperatures			
	20 °C	40 °C	60 °C	80 °C
PVC-U	++	++	++	-
PE	++	++	++	-
PP	++	++	++	++
Starch solution, aqueous solutions	Fluid Temperatures			
	20 °C	40 °C	60 °C	80 °C
PVC-U	++	++	++	-
PE	++	++	++	-
PP	++	++	++	++
Styrene	Fluid Temperatures			
	20 °C	40 °C	60 °C	80 °C
PVC-U	-			
PE	O			
PP	O			
Succinic acid, aquesous solutions	Fluid Temperatures			
	20 °C	40 °C	60 °C	80 °C
PVC-U	++	++	++	-
PE	++	++	++	-
PP	++	++	++	O
Sulfuric acid, <= 25% aqueous solution	Fluid Temperatures			
	20 °C	40 °C	60 °C	80 °C
PVC-U	++	++	++	-
PE	++	++	++	-
PP	+	+	+	O
Sulfuric acid, > 25-50% solution	Fluid Temperatures			
	20 °C	40 °C	60 °C	80 °C
PVC-U	++	++	++	-
PE	++	++	++	-
PP	+	+	+	+
Sulfuric acid, > 50 - 70% solution	Fluid Temperatures			
	20 °C	40 °C	60 °C	80 °C
PVC-U	+	+	+	-
PE	++	++	++	-
PP	+	+	+	O
Sulfuric acid, > 70 - 78% solution	Fluid Temperatures			
	20 °C	40 °C	60 °C	80 °C
PVC-U	+	+	-	
PE	++	++	++	-
PP	+	+	O	O
Sulfuric Acid, > 78 - 93% solution	Fluid Temperatures			
	20 °C	40 °C	60 °C	80 °C
PVC-U	+	+	-	
PE	-			
PP	-			
Sulfuric acid, > 93 - 96% solution	Fluid Temperatures			
	20 °C	40 °C	60 °C	80 °C
PVC-U	+	+	-	
PE	-			
PP	-			
Sulfuric acid, > 96% - 98% solution	Fluid Temperatures			
	20 °C	40 °C	60 °C	80 °C
PVC-U	+	O	-	
PE	-			
PP	-			
Sulfurous acid, aqueous solution	Fluid Temperatures			
	20 °C	40 °C	60 °C	80 °C
PVC-U	++	++	O	-
PE	++	++	O	-
PP	++	++	O	-
Sulfuryl chloride	Fluid Temperatures			
	20 °C	40 °C	60 °C	80 °C
PVC-U	-			
PE	-			
PP	-			
Sulphur dioxide, gaseous, dry and moist	Fluid Temperatures			
	20 °C	40 °C	60 °C	80 °C
PVC-U	O			
PE	O			
PP	O			
Tannic acid, aqueous solution	Fluid Temperatures			
	20 °C	40 °C	60 °C	80 °C
PVC-U	++	O		
PE	++	O		
PP	++	O		
Tartaric acid, <=10% aqueous solution	Fluid Temperatures			
	20 °C	40 °C	60 °C	80 °C
PVC-U	++	++	++	-
PE	++	++	++	-
PP	++	++	++	O
Tetrachloroethane	Fluid Temperatures			
	20 °C	40 °C	60 °C	80 °C
PVC-U	-			
PE	-			
PP	-			
Tetrachloroethylene	Fluid Temperatures			
	20 °C	40 °C	60 °C	80 °C
PVC-U	-			
PE	O			
PP	O			
Tetrachloromethane	Fluid Temperatures			
	20 °C	40 °C	60 °C	80 °C
PVC-U	-			
PE	-			
PP	-			
Tetrahydrofurane	Fluid Temperatures			
	20 °C	40 °C	60 °C	80 °C
PVC-U	-			
PE	O			
PP	O			
Tetramethyl ammoniumhydroxide	Fluid Temperatures			
	20 °C	40 °C	60 °C	80 °C
PVC-U	++	O	O	-
PE	++	O	O	-
PP	++	O	O	
Tin (II) Chloride, aqueous saturated solution	Fluid Temperatures			
	20 °C	40 °C	60 °C	80 °C
PVC-U	++	++	++	-
PE	++	++	++	-
PP	++	++	++	O
Toluene	Fluid Temperatures			
	20 °C	40 °C	60 °C	80 °C
PVC-U	-			
PE	O			
PP	O			
Trichloroacetic acid, aqueous solutions	Fluid Temperatures			
	20 °C	40 °C	60 °C	80 °C
PVC-U	O			
PE	++	++	O	
PP	++	++	O	
Trichloroethane	Fluid Temperatures			
	20 °C	40 °C	60 °C	80 °C
PVC-U	-			
PE	O			
PP	O			
Trichloroethylene	Fluid Temperatures			
	20 °C	40 °C	60 °C	80 °C
PVC-U	-			
PE	-			
PP	-			
Trichloromethane	Fluid Temperatures			
	20 °C	40 °C	60 °C	80 °C
PVC-U	-			
PE	O			
PP	O			

Chemical Resistance

Triethylamine	Fluid Temperatures			
	20 °C	40 °C	60 °C	80 °C
PVC-U	-			
PE	O			
PP	O			
Trifluoroacetic acid, aqueous solution	Fluid Temperatures			
	20 °C	40 °C	60 °C	80 °C
PVC-U	-			
PE	++	O		
PP	++	O		
Turpentine oil	Fluid Temperatures			
	20 °C	40 °C	60 °C	80 °C
PVC-U	O			
PE	O			
PP	-			
Urea, aqueous solution	Fluid Temperatures			
	20 °C	40 °C	60 °C	80 °C
PVC-U	++	++	O	-
PE	++	++	++	-
PP	++	++	++	O
Urine	Fluid Temperatures			
	20 °C	40 °C	60 °C	80 °C
PVC-U	++	++	O	-
PE	++	++	++	-
PP	++	++	++	O
Vinyl acetate	Fluid Temperatures			
	20 °C	40 °C	60 °C	80 °C
PVC-U	-			
PE	++	++	O	
PP	++	O		
Vinyl Chloride gas	Fluid Temperatures			
	20 °C	40 °C	60 °C	80 °C
PVC-U	-			
PE	-			
PP	-			

Mineral water	Fluid Temperatures			
	20 °C	40 °C	60 °C	80 °C
PVC-U	++	++	-	
PE	++	++	++	-
PP	++	++	++	++
Potable Water	Fluid Temperatures			
	20 °C	40 °C	60 °C	80 °C
PVC-U	++	++	++	-
PE	++	++	++	-
PP	++	++	++	++
Sea water	Fluid Temperatures			
	20 °C	40 °C	60 °C	80 °C
PVC-U	++	++	++	-
PE	++	++	++	-
PP	++	++	++	++
Water - distilled - deionised	Fluid Temperatures			
	20 °C	40 °C	60 °C	80 °C
PVC-U	++	++	++	-
PE	++	++	++	-
PP	++	++	++	++
Water, drinking, chlorinated, ≤ 0.1 ppm Chlorine	Fluid Temperatures			
	20 °C	40 °C	60 °C	80 °C
PVC-U	++	++	++	-
PE	++	++	++	-
PP	++	++	++	++
Xylene	Fluid Temperatures			
	20 °C	40 °C	60 °C	80 °C
PVC-U	-			
PE	-			
PP	-			
Zinc salts, aqueous saturated solutions	Fluid Temperatures			
	20 °C	40 °C	60 °C	80 °C
PVC-U	++	++	++	-
PE	++	++	++	-
PP	++	++	++	++

++ Resistant
+ Limited Resistance
O Contact GF Hakan Plastik
- Not Resistant

GF Hakan Plastik Boru ve Profil Sanayi ve Ticaret A.Ş. has right to change all the technical values and visuals specified in this bro chure. We do not accept responsibility for printing-related errors.

NOTES

NOTES

INFRASTRUCTURE PIPES CATALOG

PIPING SYSTEMS

GF PIPING SYSTEMS

+GF+

hakan PLASTiK

+GF+ hakan PLASTiK
IRAQ DISTRIBUTOR

EYDO PIPE

MELBERK DIŞ TİCARET A.Ş.
MELBERK FOREIGN TRADE INC. CORP.

HEADQUARTER
Çarşı Mah. Sakarya Cad.No:52/4 Merkez / Elazığ
BRANCH
Mehmet Şevki Paşa Cad. Bostancı Mah.
No: 17/A Kadıköy/istanbul

T: +90 532 284 95 11
+90 532 284 43 11
E: info@eydopipe.com.tr
W: www.eydopipe.com.tr